ПОЛУПРОМЫШЛЕННАЯ СЕРИЯ DC INVERTER

Комплектация - Generation III

℃

TECHNICAL SALES GUIDE-50Hz

CAPACITY RANGE:2.7~17kW

SUPER HIGH AMBIENT OPERATION TO 48

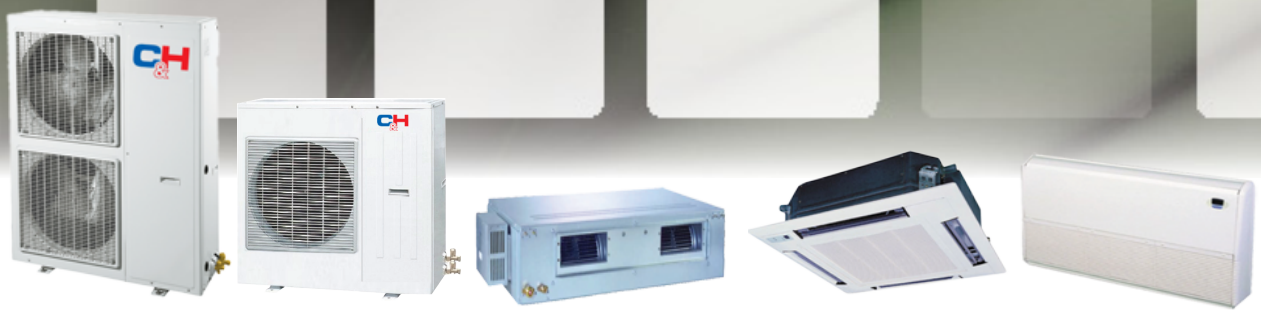

R410A

Designed by Cooper&Hunter International Corporation, Oregon, USA

www.cooperandhunter.com

CONTENT

1 MODELS LIST 3
2 NOMENCLATURE 5
3 FUNCTION 7
4 PRODUCT DATA 12
5 FAN CHARACTERISTICS 79
6 DIMENSION 80
7 WIRING DIAGRAM 88
8 ACCESSORIES 94

1 MODELS LIST

1.1 Outdoor Unit

Model		Power supply (V, Ph, Hz)	Appearance
R410A	GUHD09NK3CO/GUHD12NK3CO	220-240 ~ ,1 ,50	
	GUHD09NK3C1O/GUHD12NK3C1O	220-240 ~ ,1 ,50	
	GUHD18NK3CO/GUHD18NK3C1O	220-240 ~ ,1 ,50	
	GUHD24NK3CO/GUHD24NK3C1O	220-240 ~ ,1 ,50	
	GUHD30NK3CO/GUHD30NK3C1O	220-240 ~ ,1 ,50	
	GUHD36NK3CO/GUHD36NK3C1O	220-240 ~ ,1 ,50	
	GUHD42NK3CO/GUHD42NK3C1O	220-240 ~ ,1 ,50	
	GUHD36NM3CO/GUHD36NM3C1O	380-415 ~,3,50	
	GUHD42NM3CO/GUHD42NM3C1O	380-415 ~,3,50	
	GUHD48NK3CO/GUHD48NK3C1O	220-240 ~ ,1 ,50	
	GUHD48NM3CO/GUHD48NM3C1O	380-415 ~,3,50	
	GUHD60NM3CO/GUHD60NM3C1O	380-415 ~3,50	

Note:The unit GUHD*N*3C1O is capable for low ambient cooling.

1Ton=12000Btu/h=3.517kw

1.2 Indoor Unit

Type	Model Name		Nominal Capacity Cooling/Heating (Btu/h)	Power supply (V, Ph, Hz)	Appearance
Duct Type	R410A	GFH09K3CI	9212/10000	220-240 ~ 1, 50	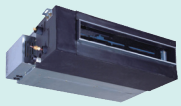
		GFH12K3CI	12000/13000		
		GFH18K3CI	18000/21000		
		GFH24K3CI	24000/25500		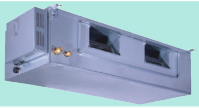
		GFH30K3CI	28000/30000		
		GFH36K3CI	35120/39238		
		GFH42K3CI	37530/42650		
		GFH48K3CI	48000/56300		
		GFH60K3CI	58000/61400		
Cassette Type	R410A	GKH12K3CI	11600/12600	220-240 ~ 1, 50	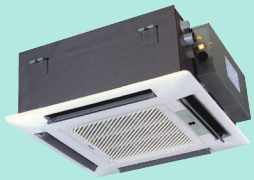
		GKH18K3CI	18000/21000		
		GKH24K3CI	24000/27000		
		GKH30K3CI	30000/32400		
		GKH36K3CI	34120/37530		
		GKH42K3CI	37530/42300		
Floor Ceiling Type	R410A	GTH09K3CI	10236/10236	220-240 ~ 1, 50	
		GTH12K3CI	11600/13000		
		GTH18K3CI	18000/21000		
		GTH24K3CI	24000/27000		
		GTH30K3CI	30000/32400		
		GTH36K3CI	35826/39238		
		GTH42K3CI	39238/42650		
		GTH48K3CI	48000/56000	220-240 ~ 1, 50	
		GTH60K3CI	54500/59700		

2 NOMENCLATURE

2.1 Outdoor unit

G	U	H	D	09	N	K	3	C1	O
1	2	3	4	5	6	7	8	9	10

NO.	Description	Options
1	Gree Electric Appliances Inc	Capital Letter :G
2	Unit Type	U=U-Match Outdoor Unit F=Duct Type K=Cassette Type T= Floor-ceiling Type
3	Product Type	C=Cool Only H=Heat Pump without Aux Electric Heaters
4	Compressor Power Supply Type Code	N=Constant Frequency D=DC Inverter A=AC Inverter
5	Nominal Cooling Capacity	Nominal Cooling Capacity =Number×1000Btu/h
6	Climate Type	N=Climate T1 Condition T= Climate T3 Condition
7	Power Supply Code	K=1Ph 220~240V 50HZ M=3Ph 380~415V 50HZ
8	Refrigerant	1 =R22 2=R407C 3=R410A
9	Design and design change Code	Design Code: A, B, C, D..... design change Code=0(Default) 1,2,3.....
10	Unit Code	O=Outdoor unit

2.2 Indoor unit

G	F	H	09	T	K	3	C	I
1	2	3	4	5	6	7	8	9

NO.	Description	Options
1	Gree Electric Appliances Inc	Capital Letter :G
2	Unit Type	F=Duct Type K=Cassette Type T= Ceiling Type
3	Product Type	C=Cool Only H=Heat Pump without Aux Electric Heaters
4	Nominal Cooling Capacity	Nominal Cooling Capacity =Number×1000Btu/h
5	Climate Type	N=Climate T1 Condition T= Climate T3 Condition
6	Power Supply Code	K=1Ph 220~240V 50HZ M=3Ph 380~415V 50HZ
7	Refrigerant	1 =R22 2=R407C 3=R410A
8	Design Code and design change Code	Design Code: A, B, C, D…… design change Code=0(Default) 1,2,3……
9	Unit Code for Indoor Unit	I=Indoor Unit

3 FUNCTION

3.1 Description

Gree R410A AA DC Inverter U-Match Series Air Conditioners have combined the extraordinary comfort of the central air conditioners with the convenient installation and facility of the mini type of the split air conditioners. It is equipped with the condenser coil constructed of the hydrophilic aluminum sheet and the inner groove copper pipe, and also the low-noise compressor with various protections on the high/low pressure, high discharge temperature, overload, phase loss or reverse, and the sensor malfunction alarm. The casing of this unit is made of pre-painted steel, capable of resisting corrosion and rust creep and ensuring minimal fading when exposed to sunlight.

Gree R410A AA DC Inverter U-Match Series Air Conditioning Units can offer the perfect combination of superior product quality, high operating efficiency and cost efficiency. The capacity rated according to EN 14511 ranges from 09KBtu/h to 60 KBu/h, which could be sufficient to different requirements from customers. These units are CE certificated and manufactured under strict control with full conformance to ISO 9001:2000 and ISO 14001 standards. All units are factory tested prior to dispatch to verify the operation performance and control functioning.

Gree R410A AA DC Inverter U-Match Series Air Conditioning Units can be widely used in small supermarkets, chain stores, hotels, restaurants, offices and meeting room etc. especially fit for the small commercial and industrial application. Its indoor units come to cassette type, duct type and floor ceiling type, making the installation more flexible. The unit can set for cooling even when the outdoor ambient temperature drops to -15℃ and thus an ideal for locations that require cooling even in winter.

3.2 Unit function

Unit function

Memory function

- when unit restarts after power off, it will run on former status, the mode and parameter are kept the same.

Remote control function

- wireless controller and remote controller can be selected, and the maximum control distance of remote controller is 10m.

Timing function

- it can timing ON/ OFF separately, meanwhile, it can also timing on circularly.

Sleep function

- it can self control for saving energy in energy saving mode.

Automatic function

- the fan of indoor unit can adjust fan speed automatically based on actual demand when cooling or heating under automatic mode.

Unit function

Weekly Time

- Centralized Control and Weekly Timer Functions: The centralized controller and the weekly timer are integrated in the same wire controller. The system has both the centralized control and the week timing functions. Up to 16 sets of units can be controlled simultaneously by the centralized controller (weekly timer). The weekly timer has the function of invalidating the lower unit. The weekly timing function is able to realized four timing ON/OFF periods for any unit every day, so as to achieve fully automatic operation. No timing control can be set for holidays.heating under automatic mode.

Timing ON/OFF display

- display and timing turn ON/OFF time (only with wired controller have this function).

Fan speed display

- display the speed (high,medium,low) of fan (only with wired controller have this function).

Function model display

- cooling mode,dry mode,heating mode,fan mode (only with wired controller have this function).

Testing display

- display testing mode (only with wired controller have this function).

Temperature display

- display room temperature and set temperature (only with wired controller and remoter board have this function).

High/low pressure protection

- when suction pressure is too low or discharge pressure is too high, compressor will stop and unit display malfunction code.

Overload protection

- compressor has its own overheat protection.Once the temperature of compressor is higher than allowable level, compressor will stop and only when temperature recovery, compressor restart.

Discharge high temperature protection

- once the discharge temperature of compressor is higher than allowable value, compressor will stop and unit display malfunction code.

Reverse (open) phase protection

- once the phase sequence of power supply is incongruent or the phase is absent, unit can't work.

Anti-high temperature protection

- once the heat exchanger temperature of indoor unit is too high ,the outdoor fan motor will stop.

3.3 Features-Indoor Units

(1) Duct Type

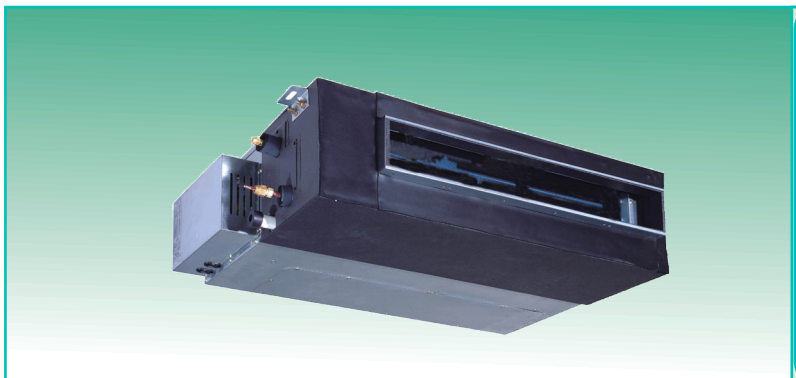

Airflow Patterns for Extra Comfort :
It can connect many supply-air outlet to the duct, so that it can make the temperature and humidity of the whole room equality, meanwhile, it can lead in fresh air, makes well indoor unit air quality. All units are provided with filters that they are easily accessible from the rear of the unit.

Flexible Installation:
Air-supply or air-return type, condensation water exit direction, and modes of wyer (adopting either underside air back or rear air back) etc can be selected flexibly.

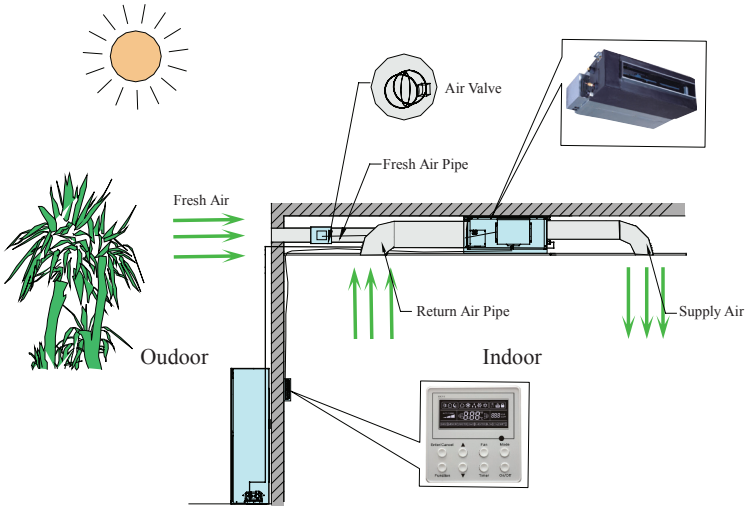

Easy Maintenance:
Evaporator coils are constructed of quality inner groove copper tube and hydrophilic aluminum sheet. It adopts easy and reliable configuration design ,so Maintenance is very convenient and easy.

Versatile Functions:

- 3-Speeds Fan Control
- Temperature Setting
- Fan Function
- Sleep Function
- Memory Function
- Self-diagnosis with Alarm Function
- Timing Function
- Long-distance monitoring function

(2) Floor Ceiling Type

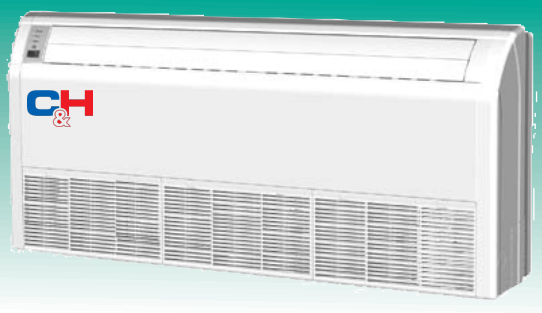

Flexible Installation :

There are two styles of installation: Ceiling Type and floor Type.

Ceiling Type:

Floor Type:

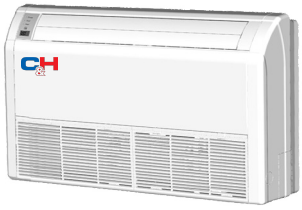

Easier Maintenance and Cleaning :

The Ceiling Type is equipped with anti-mould long-life air filter .If the air filter is very dirty, can clean it by a vacuum cleaner or wash it with soap water.

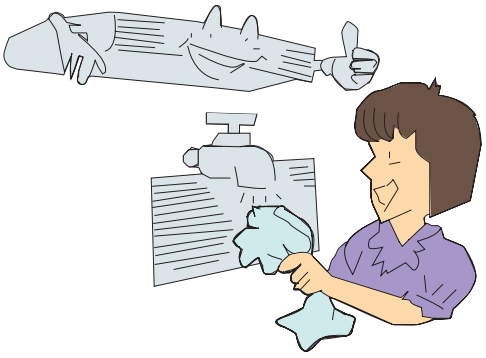

Versatile Functions:

- 3 Speeds Fan Control
- Temperature Setting
- Fan Function
- Sleep Function
- Memory Function
- Self-diagnosis with Alarm Function
- Swing Function
- Timing Function
- Long-distance monitoring function

(3) Cassette Type

Airflow Patterns for Extra Comfort :
It can blow to four different directions, so that it can make the temperature and humidity of the whole room equality .

Low Noise :
It adopts low noise design, such as low noise fan, low noise motor, etc.

Easy Maintenance and Cleaning:
It adopts easy and reliable configuration design, so Maintenance is very convenient.

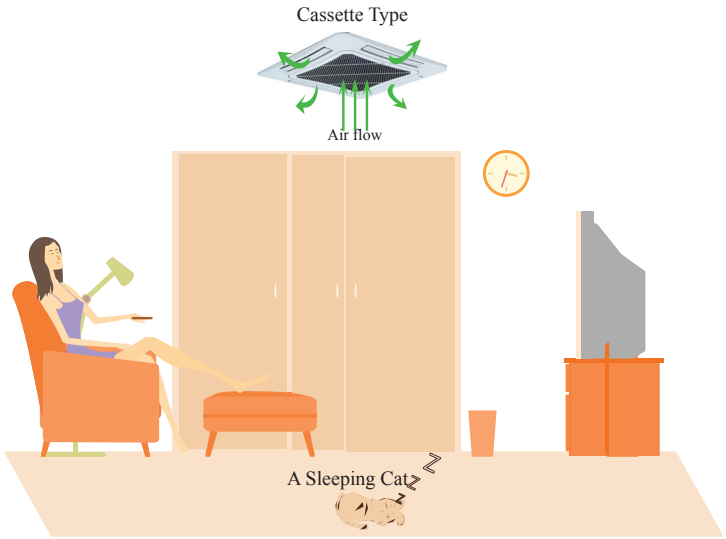

Versatile Functions:

- 3 Speeds Fan Control
- Temperature Setting
- Fan Function
- Sleep Function
- Memory Function
- Self-diagnosis with Alarm Function
- Swing Function
- Timing Function
- Long-distance monitoring function

4 PRODUCT DATA

4.1 Product Data at Rated Condition

(1) Duct type

Model	Indoor unit		GFH09K3CI	GFH12K3CI
	Outdoor unit		GUHD09NK3CO	GUHD12NK3CO
Nominal Capacity	Cooling	kW	2.7	3.5
		Btu/h	9212	12000
	Heating	kW	2.9	3.8
		Btu/h	9895	13000
Power Input	Cooling	kW	0.83	1.077
	Heating	kW	0.803	0.974
EER/COP		W/W	3.25/3.61	3.25/3.9
Indoor Unit			GFH09K3CI	GFH12K3CI
Power Supply		-	220-240V-50Hz-1Ph	
Heat Exchange		-	Cross Fin Coil	Cross Fin Coil
Fan	Type	-	Centrifugal fan	Centrifugal fan
	Drive	-	direct	direct
	Motor Output	kW	0.04×1	0.06×1
	Air Flow	m^3/h	800	840
	Rated Ext. Static Pressure	Pa	25	25
Sound Pressure Level(H/M/L)		dB(A)	40/38/36	37/35/33
Air Filter		-	Standard washable synthetic	
Drain Piping		mm	Φ20×1.2	Φ30×1.5
Dimensions (W×H×D) (Outline/Package)		mm	880×250×665	980×266×721
			1023 ×320×748	1123×323×798
Weight(Net/Gross)		kg	26/32	34/41
Outdoor Unit			GUHD09NK3CO	GUHD12NK3CO
Power Supply		-	220-240V-50Hz-1Ph	
Heat Exchange		-	Cross Fin Coil	
Fan	Type	-	Axial fan	
	Fan Motor Speed	rpm	850	850
Compressor	Type	-	ROTARY	ROTARY
	Power Input	W	1070	1070
Refrigerant	Type	-	R410A	
	Control	-	Capillary Tube	
	Charge	kg	1.2	1.35
Dimensions (W×H×D) (Outline/Package)		mm	776×540×320	776×540×320
			851×595×363	851×595×363
Weight(Net/Gross)		kg	28/32	30/34
Piping Connections	Liquid	Inch	Φ1/4	Φ1/4
	Gas	Inch	Φ3/8	Φ3/8
	Max. Length	m	20	20
	Max. Height	m	15	15

Continued

Model	Indoor unit		GFH09K3CI	GFH12K3CI
	Outdoor unit		GUHD09NK3C1O	GUHD12NK3C1O
Nominal Capacity	Cooling	kW	2.7	3.5
		Btu/h	9212	12000
	Heating	kW	2.9	3.8
		Btu/h	9895	13000
Power Input	Cooling	kW	0.83	1.077
	Heating	kW	0.803	0.974
EER/COP		W/W	3.25/3.61	3.25/3.90
Indoor Unit			GFH09K3CI	GFH12K3CI
Power Supply		-	220-240V-50Hz-1Ph	
Heat Exchange		-	Cross Fin Coil	Cross Fin Coil
Fan	Type	-	Centrifugal fan	Centrifugal fan
	Drive	-	direct	direct
	Motor Output	kW	0.04×1	0.06×1
	Air Flow	m^3/h	800	840
	Rated Ext. Static Pressure	Pa	25	25
Sound Pressure Level(H/M/L)		dB(A)	40/38/36	37/35/33
Air Filter			Standard washable synthetic	
Drain Piping		mm	Φ20×1.2	Φ30×1.5
Dimensions (W×H×D) (Outline/Package)		mm	880×250×665	980×266×721
			1023 ×320×748	1123×323×798
Weight(Net/Gross)		kg	26/32	34/41
Outdoor Unit			GUHD09NK3C1O	GUHD12NK3C1O
Power Supply		-	220-240V-50Hz-1Ph	
Heat Exchange		-	Cross Fin Coil	
Fan	Type	-	Axial fan	
	Fan Motor Speed	rpm	900	900
Compressor	Type	-	ROTARY	ROTARY
	Power Input	W	1070	1070
Refrigerant	Type	-	R410A	
	Control	-	Capillary Tube	
	Charge	kg	1.2	1.25
Dimensions (W×H×D) (Outline/Package)		mm	848×540×320	848×540×320
			881×595×363	881×595×363
Weight(Net/Gross)		kg	33/37	33/37
Piping Connections	Liquid	Inch	Φ1/4	Φ1/4
	Gas	Inch	Φ3/8	Φ3/8
	Max. Length	m	20	20
	Max. Height	m	15	15

Continued 1

Model	Indoor unit		GFH18K3CI	GFH24K3CI	GFH30K3CI
	Outdoor unit		GUHD18NK3CO	GUHD24NK3CO	GUHD30NK3CO
Nominal Capacity	Cooling	kW	5.3	7	8.2
		Btu/h	18000	24000	28000
	Heating	kW	6.15	7.5	8.8
		Btu/h	21000	25500	30000
Power Input	Cooling	kW	1.65	2.18	2.55
	Heating	kW	1.7	2.07	2.43
EER/COP		W/W	3.21/3.62	3.21/3.62	3.22/3.62
Indoor Unit			GFH18K3CI	GFH24K3CI	GFH30K3CI
Power Supply		-	220-240V-50Hz-1Ph		
Heat Exchange		-	Cross Fin Coil	Cross Fin Coil	Cross Fin Coil
Fan	Type	-	Centrifugal fan	Centrifugal fan	Centrifugal fan
	Drive	-	direct	direct	direct
	Motor Output	kW	0.07×1	0.15×1	0.15×1
	Air Flow	m^3/h	1000/800/600	1600/1400/1200	1500/1300/1100
	Rated Ext. Static Pressure	Pa	25	25	37
Sound Pressure Level(H/M/L)		dB(A)	42/38/36	47/44/42	47/44/42
Air Filter			Standard washable synthetic		
Drain Piping		mm	Φ30×1.5	Φ20×1.2	Φ20×1.2
Dimensions (W×H×D) (Outline/Package)		mm	980×266×721	1270×268×530	1270×268×530
			1123×323×798	1348×283×597	1348×283×597
Weight(Net/Gross)		kg	34/41	37/43	36/41
Outdoor Unit			GUHD18NK3CO	GUHD24NK3CO	GUHD30NK3CO
Power Supply		-	220-240V-50Hz-1Ph		
Heat Exchange		-	Cross Fin Coil		
Fan	Type	-	Axial fan		
	Fan Motor Speed	rpm	690±15	780±20	780±20
Compressor	Type		ROTARY	ROTARY	ROTARY
	Power Input	W	1630	2200	2200
Refrigerant	Type		R410A		
	Control		Electronic Expansion Valve		
	Charge	kg	1.4	2.4	2.6
Dimensions (W×H×D) (Outline/Package)		mm	955×700×396	980×790×427	980×790×427
			1029× 750×458	1083×855×488	1083×855×488
Weight(Net/Gross)		kg	48/53	65/70	68/74
Piping Connections	Liquid	Inch	Φ1/4	Φ3/8	Φ3/8
	Gas	Inch	Φ1/2	Φ5/8	Φ5/8
	Max. Length	m	20	30	30
	Max. Height	m	15	15	15

Continued 2

Model	Indoor unit		GFH18K3CI	GFH24K3CI	GFH30K3CI
	Outdoor unit		GUHD18NK3C1O	GUHD24NK3C1O	GUHD30NK3C1O
Nominal Capacity	Cooling	kW	5.3	7	8.2
		Btu/h	18000	24000	28000
	Heating	kW	6.15	7.5	8.8
		Btu/h	21000	25500	30000
Power Input	Cooling	kW	1.65	2.18	2.55
	Heating	kW	1.70	2.07	2.43
EER/COP		W/W	3.21/3.62	3.21/3.62	3.22/3.62
Indoor Unit			GFH18K3CI	GFH24K3CI	GFH30K3CI
Power Supply		-	220-240V-50Hz-1Ph		
Heat Exchange		-	Cross Fin Coil	Cross Fin Coil	Cross Fin Coil
Fan	Type	-	Centrifugal fan	Centrifugal fan	Centrifugal fan
	Drive	-	direct	direct	direct
	Motor Output	kW	0.07×1	0.15×1	0.15×1
	Air Flow	m^3/h	1000/800/600	1600/1400/1200	1500/1300/1100
	Rated Ext. Static Pressure	Pa	25	25	37
Sound Pressure Level(H/M/L)		dB(A)	42/38/36	47/44/42	47/44/42
Air Filter		-	Standard washable synthetic		
Drain Piping		mm	Φ30×1.5	Φ20×1.2	Φ20×1.2
Dimensions (W×H×D) (Outline/Package)		mm	980×266×721	1270×268×530	1270×268×530
			1123×323×798	1348×283×597	1348×283×597
Weight(Net/Gross)		kg	34/41	37/43	36/41
Outdoor Unit			GUHD18NK3C1O	GUHD24NK3C1O	GUHD30NK3C1O
Power Supply		-	220-240V-50Hz-1Ph		
Heat Exchange		-	Cross Fin Coil		
Fan	Type	-	Axial fan		
	Fan Motor Speed	rpm	840	840	840
Compressor	Type	-	ROTARY	ROTARY	ROTARY
	Power Input	W	1630	2200	2200
Refrigerant	Type	-	R410A		
	Control	-	Electronic Expansion Valve		
	Charge	kg	1.4	2.4	2.6
Dimensions (W×H×D) (Outline/Package)		mm	955×700×396	980×790×427	980×790×427
			1029× 750×458	1083×855×488	1083×855×488
Weight(Net/Gross)		kg	46/51	65/70	68/74
Piping Connections	Liquid	Inch	Φ1/4	Φ3/8	Φ3/8
	Gas	Inch	Φ1/2	Φ5/8	Φ5/8
	Max. Length	m	20	30	30
	Max. Height	m	15	15	15

Continued 3

Model	Indoor unit		GFH36K3CI	GFH42K3CI	GFH36K3CI
	Outdoor unit		GUHD36NK3CO	GUHD42NK3CO	GUHD36NM3CO
Nominal Capacity	Cooling	kW	10.0	11.0	10.3
		Btu/h	34120	37530	35140
	Heating	kW	11.5	12.5	11.5
		Btu/h	39238	42650	39238
Power Input	Cooling	kW	3.115	3.42	3.2
	Heating	kW	3.18	3.46	3.18
EER/COP		W/W	3.21/3.61	3.21/3.61	3.21/3.61
Indoor Unit			GFH36K3CI	GFH42K3CI	GFH36K3CI
Power Supply		-	220-240V-50Hz-1Ph		
Heat Exchange		-	Cross Fin Coil	Cross Fin Coil	Cross Fin Coil
Fan	Type	-	Centrifugal fan	Centrifugal fan	Centrifugal fan
	Drive	-	direct	direct	direct
	Motor Output	kW	0.5×1	0.5×1	0.5×1
	Air Flow	m^3/h	2300/2110/1850	2300/2110/1850	2300/2110/1850
	Rated Ext. Static Pressure	Pa	37	37	37
Sound Pressure Level(H/M/L)		dB(A)	53/50/46	53/50/46	53/50/46
Air Filter		-	Standard washable synthetic		
Drain Piping		mm	Φ20×1.2	Φ20×1.2	Φ20×1.2
Dimensions (W×H×D) (Outline/Package)		mm	1226×290×775	1226×290×775	1226×290×775
			1338×305×877	1338×305×877	1338×305×877
Weight(Net/Gross)		kg	57/67	57/67	57/67
Outdoor Unit			GUHD36NK3CO	GUHD42NK3CO	GUHD36NM3CO
Power Supply		-	220-240V-50Hz-1Ph		380-415V-50Hz-3Ph
Heat Exchange		-	Cross Fin Coil		Cross Fin Coil
Fan	Type	-	Axial fan		Axial fan
	Fan Motor Speed	rpm	820±20		820±20
Compressor	Type	-	ROTARY		ROTARY
	Power Input	W	3010±7.5%		3010±7.5%
Refrigerant	Type	-	R410A		R410A
	Control	-	Electronic Expansion Valve		
	Charge	kg	3.8	3.8	3.8
Dimensions (W×H×D) (Outline/Package)		mm	1107×1100×440		1107×1100×440
			1158×1235×493		1158×1235×493
Weight(Net/Gross)		kg	90/101	90/101	92/103
Piping Connections	Liquid	Inch	Φ3/8	Φ3/8	Φ3/8
	Gas	Inch	Φ5/8	Φ5/8	Φ5/8
	Max. Length	m	30	50	30
	Max. Height	m	15	30	15

Continued 4

Model	Indoor unit		GFH36K3CI	GFH42K3CI	GFH36K3CI
	Outdoor unit		GUHD36NK3C1O	GUHD42NK3C1O	GUHD36NM3C1O
Nominal Capacity	Cooling	kW	10.0	11.0	10.0
		Btu/h	34100	37530	34100
	Heating	kW	11.0	12.0	11.0
		Btu/h	37500	40944	37500
Power Input	Cooling	kW	3.115	3.426	3.115
	Heating	kW	3.047	3.3	3.047
EER/COP		W/W	3.21/3.61	3.21/3.61	3.21/3.61
Indoor Unit			GFH36K3CI	GFH42K3CI	GFH36K3CI
Power Supply		-	220-240V-50Hz-1Ph		
Heat Exchange		-	Cross Fin Coil		
Fan	Type	-	Centrifugal fan		
	Drive	-	direct		
	Motor Output	kW	0.5×1		
	Air Flow	m^3/h	2300/2110/1850		2300/2110/1850
	Rated Ext. Static Pressure	Pa	37		37
Sound Pressure Level(H/M/L)		dB(A)	53/50/46		53/50/46
Air Filter		-	Standard washable synthetic		
Drain Piping		mm	Φ20×1.2	Φ20×1.2	Φ20×1.2
Dimensions (W×H×D) (Outline/Package)		mm	1226×290×775	1226×290×775	1226×290×775
			1338×305×877	1338×305×877	1338×305×877
Weight(Net/Gross)		kg	57/67	57/67	57/67
Outdoor Unit			GUHD36NK3C1O	GUHD42NK3C1O	GUHD36NM3C1O
Power Supply		-	220-240V-50Hz-1Ph		380-415V-50Hz-3Ph
Heat Exchange		-	Cross Fin Coil		Cross Fin Coil
Fan	Type	-	Axial fan		Axial fan
	Fan Motor Speed	rpm	900		900
Compressor	Type	-	ROTARY		ROTARY
	Power Input	W	3010±7.5%		3010±7.5%
Refrigerant	Type	-	R410A		R410A
	Control	-	Electronic Expansion Valve		
	Charge	kg	3.8	3.8	3.8
Dimensions (W×H×D) (Outline/Package)		mm	1107×1100×440		1107×1100×440
			1158×1235×493		1158×1235×493
Weight(Net/Gross)		kg	89/100	89/100	88/99
Piping Connections	Liquid	Inch	Φ3/8	Φ3/8	Φ3/8
	Gas	Inch	Φ5/8	Φ5/8	Φ5/8
	Max. Length	m	30	50	30
	Max. Height	m	15	30	15

Continued 5

Model	Indoor unit		GFH42K3CI	GFH48K3CI	GFH48K3CI
	Outdoor unit		GUHD42NM3CO	GUHD48NM3CO	GUHD48NK3CO
Nominal Capacity	Cooling	kW	11	14	14
		Btu/h	37530	48000	48000
	Heating	kW	12.5	16.5	16.5
		Btu/h	42650	56300	56300
Power Input	Cooling	kW	3.42	4.35	4.35
	Heating	kW	3.46	4.5	4.5
EER/COP		W/W	3.21/3.61	3.22/3.67	3.22/3.67
Indoor Unit			GFH42K3CI	GFH48K3CI	GFH48K3CI
Power Supply			220-240V-50Hz-1Ph		
Heat Exchange			Cross Fin Coil		
Fan	Type		Centrifugal fan		
	Drive		direct		
	Motor Output	kW	0.5×1	0.5×1	0.5×1
	Air Flow	m^3/h	2300/2110/1850	2500/2300/2100	2500/2300/2100
	Rated Ext. Static Pressure	Pa	37	50	50
Sound Pressure Level(H/M/L)		dB(A)	53/50/46	53/50/46	53/50/46
Air Filter			Standard washable synthetic		
Drain Piping		mm	Φ20×1.2	Φ30×1.5	Φ30×1.5
Dimensions (W×H×D)		mm	1226×290×775	1226×330×815	1226×330×815
(Outline/Package)			1338×305×877	1338×345×925	1338×345×925
Weight(Net/Gross)		kg	57/67	64/73	64/73
Outdoor Unit			GUHD42NM3CO	GUHD48NM3CO	GUHD48NK3CO
Power Supply			380-415V-50Hz-3Ph		220-240V-50Hz-1Ph
Heat Exchange			Cross Fin Coil		
Fan	Type		Axial fan		
	Fan Motor Speed	rpm	820±20	690	690
Compressor	Type		ROTARY		
	Power Input	W	3010±7.5%	4220	4220
Refrigerant	Type		R410A		
	Control		Electronic Expansion Valve		
	Charge	kg	3.8	4.3	4.3
Dimensions (W×H×D) (Outline/Package)		mm	1107×1100×440	1085×1365×427	1085×1365×427
			1158×1235×493	1143×1505×478	1143×1505×478
Weight(Net/Gross)		kg	92/103	116/128	116/128
Piping Connections	Liquid	Inch	Φ3/8	Φ3/8	Φ3/8
	Gas	Inch	Φ5/8	Φ5/8	Φ5/8
	Max. Length	m	50	50	50
	Max. Height	m	30	30	30

Continued 6

Model	Indoor unit		GFH42K3CI	GFH48K3CI	GFH48K3CI
	Outdoor unit		GUHD42NM3C1O	GUHD48NM3C1O	GUHD48NK3C1O
Nominal Capacity	Cooling	kW	11	14	14
		Btu/h	37530	48000	48000
	Heating	kW	12.0	16.0	16.0
		Btu/h	40944	54600	54600
Power Input	Cooling	kW	3.425	4.36	4.36
	Heating	kW	3.32	4.43	4.43
EER/COP		W/W	3.21/3.61	3.21/3.61	3.21/3.61
Indoor Unit			GFH42K3CI	GFH48K3CI	GFH48K3CI
Power Supply		-	220-240V-50Hz-1Ph		
Heat Exchange		-	Cross Fin Coil		
Fan	Type	-	Centrifugal fan		
	Drive	-	direct		
	Motor Output	kW	0.5×1	0.5×1	0.5×1
	Air Flow	m^3/h	2300/2110/1850	2500/2300/2100	2500/2300/2100
	Rated Ext. Static Pressure	Pa	37	50	50
Sound Pressure Level(H/M/L)		dB(A)	53/50/46	53/50/46	53/50/46
Air Filter		-	Standard washable synthetic		
Drain Piping		mm	Φ20×1.2	Φ30×1.5	Φ30×1.5
Dimensions (W×H×D)		mm	1226×290×775	1226×330×815	1226×330×815
(Outline/Package)			1338×305×877	1338×345×925	1338×345×925
Weight(Net/Gross)		kg	57/67	64/73	64/73
Outdoor Unit			GUHD42NM3C1O	GUHD48NM3C1O	GUHD48NK3C1O
Power Supply		-	380-415V-50Hz-3Ph		220-240V-50Hz-1Ph
Heat Exchange		-	Cross Fin Coil		
Fan	Type	-	Axial fan		
	Fan Motor Speed	rpm	900	840	840
Compressor	Type	-	ROTARY		
	Power Input	W	3010±7.5%	4220	4220
Refrigerant	Type	-	R410A		
	Control	-	Electronic Expansion Valve		
	Charge	kg	3.8	4.3	4.3
Dimensions (W×H×D) (Outline/Package)		mm	1107×1100×440	1085×1365×427	
			1158×1235×493	1143×1505×478	
Weight(Net/Gross)		kg	88/99	116/128	116/128
Piping Connections	Liquid	Inch	Φ3/8	Φ3/8	Φ3/8
	Gas	Inch	Φ5/8	Φ5/8	Φ5/8
	Max. Length	m	50	50	50
	Max. Height	m	30	30	30

Continued 7

Model	Indoor unit		GFH60K3CI	GFH60K3CI
	Outdoor unit		GUHD60NM3CO	GUHD60NM3C1O
Nominal Capacity	Cooling	kW	17	17
		Btu/h	58000	58000
	Heating	kW	18	18
		Btu/h	61400	61400
Power Input	Cooling	kW	5.29	5.3
	Heating	kW	4.98	5.0
EER/COP		W/W	3.21/3.61	3.21/3.61
Indoor Unit			GFH60K3CI	GFH60K3CI
Power Supply		-	220-240V-50Hz-1Ph	
Heat Exchange		-	Cross Fin Coil	Cross Fin Coil
Fan	Type	-	Centrifugal fan	Centrifugal fan
	Drive	-	direct	direct
	Motor Output	kW	0.33×1	0.33×1
	Air Flow	m^3/h	3150	3150
	Rated Ext. Static Pressure	Pa	50	50
Sound Pressure Level(H/M/L)		dB(A)	54/51/48	54/51/48
Air Filter		-	Standard washable synthetic	
Drain Piping		mm	Φ30×1.5	Φ30×1.5
Dimensions (W×H×D)		mm	1463×389×799	1463×389×799
(Outline/Package)			1543×470×883	1543×470×883
Weight(Net/Gross)		kg	87/115	87/115
Outdoor Unit			GUHD60NM3CO	GUHD60NM3C1O
Power Supply		-	380-415V-50Hz-3Ph	
Heat Exchange		-	Cross Fin Coil	Cross Fin Coil
Fan	Type	-	Axial fan	Axial fan
	Fan Motor Speed	rpm	800±20	800±20
Compressor	Type	-	ROTARY	ROTARY
	Power Input	W	4220	4220
Refrigerant	Type	-	R410A	
	Control	-	Electronic Expansion Valve	
	Charge	kg	5.5	5.5
Dimensions (W×H×D) (Outline/Package)		mm	1085×1365×427	1085×1365×427
			1143×1505×478	1143×1505×478
Weight(Net/Gross)		kg	121/133	118/130
Piping Connections	Liquid	inch	Φ3/8	Φ3/8
	Gas	inch	Φ3/4	Φ3/4
	Max. Length	m	50	50
	Max. Height	m	30	30

(2) Cassette type

Model		Indoor unit	GKH12K3CI	GKH18K3CI	GKH24K3CI
		Outdoor unit	GUHD12NK3CO	GUHD18NK3CO	GUHD24NK3CO
Nominal Capacity	Cooling	kW	3.4	5.3	7
		Btu/h	11600	18000	24000
	Heating	kW	3.7	6.15	8.0
		Btu/h	12600	21000	27000
Power Input	Cooling	kW	1.03	1.65	2.18
	Heating	kW	1.025	1.7	2.21
EER/COP		W/W	3.3/3.61	3.21/3.62	3.21/3.62
Indoor Unit			GKH12K3CI	GKH18K3CI	GKH24K3CI
Power Supply		–	220-240V-50Hz-1Ph		
Heat Exchange		–	Cross Fin Coil		
Fan	Type	–	Centrifugal fan		
	Drive	–	direct	direct	direct
	Motor Output	kW	0.011x1	0.035×1	0.040×1
	Air Flow	m^3/h	550/450/350	1180/1080/1000	1400/1270/1170
Sound Pressure Level(H/M/L)		dB(A)	47/45/43	47/45/43	51/49/48
Air Filter		–	Standard washable synthetic		
Drain Piping		mm	Φ32×3	Φ32×3	Φ32×3
Indoor Unit Dimensions (Outline/Package) (W×H×D)		mm	600×230×600	840×240×840	840×240×840
			851×325×681	963×325×963	963×325×963
Weight(Net/Gross)		kg	20/27	27/36	27/36
Panel Dimensions (Outline/Package) (W×H×D)		mm	650 ×50×650	950×60×950	950×60×950
			673 ×117×733	1028×130×1043	1028×130×1043
Panel Weight(Net/Gross)		kg	2.5/3.5	6.5/10	6.5/10
Outdoor Unit			GUHD12NK3CO	GUHD18NK3CO	GUHD24NK3CO
Power Supply		–	220-240V-50Hz-1Ph		
Heat Exchange		–	Cross Fin Coil		
Fan	Type	–	Axial fan		
	Fan Motor Speed	rpm	850	690±15	780±20
Compressor	Type	–	ROTARY	ROTARY	ROTARY
	Power Input	W	1070	1630	2200
Refrigerant	Type	–	R410A		
	Control	–	Caplllary Tube	Electronic Expansion Valve	
	Charge	kg	1.35	1.4	2.4
Dimensions (W×H×D) (Outline/Package)		mm	776×320×540	955×700×396	980×790×427
			851×595×363	1029× 750×458	1083×855×488
Weight(Net/Gross)		kg	30/34	48/53	65/70
Piping Connections	Liquid	Inch	Φ1/4	Φ1/4	Φ3/8
	Gas	Inch	Φ3/8	Φ1/2	Φ5/8
	Max. Length	m	20	20	30
	Max. Height	m	15	15	15

Continued

Model		Indoor unit	GKH12K3CI	GKH18K3CI	GKH24K3CI
		Outdoor unit	GUHD12NK3C1O	GUHD18NK3C1O	GUHD24NK3C1O
Nominal Capacity	Cooling	kW	3.4	5.3	7
		Btu/h	11600	18000	24000
	Heating	kW	3.7	6.15	8.00
		Btu/h	12600	21000	27000
Power Input	Cooling	kW	1.03	1.65	2.18
	Heating	kW	1.025	1.7	2.21
EER/COP		W/W	3.3/3.61	3.21/3.62	3.21/3.62
Indoor Unit			GKH12K3CI	GKH18K3CI	GKH24K3CI
Power Supply		-	220-240V-50Hz-1Ph		
Heat Exchange		-	Cross Fin Coil		
Fan	Type	-	Centrifugal fan		
	Drive	-	direct	direct	direct
	Motor Output	kW	0.011×1	0.035×1	0.040×1
	Air Flow	m^3/h	550/450/350	1180/1080/1000	1400/1270/1170
Sound Pressure Level(H/M/L)		dB(A)	47/45/43	47/45/43	51/49/48
Air Filter		-	Standard washable synthetic		
Drain Piping		mm	Φ32×3	Φ32×3	Φ32×3
Indoor Unit Dimensions (Outline/Package) (W×H×D)		mm	600×230×600	840×240×840	840×240×840
			851×325×681	963×325×963	963×325×963
Weight(Net/Gross)		kg	20/27	27/36	27/36
Panel Dimensions (Outline/Package) (W×H×D)		mm	650 ×50×650	950×60×950	950×60×950
			673 ×117×733	1028×130×1043	1028×130×1043
Panel Weight(Net/Gross)		kg	2.5/3.5	6.5/10	6.5/10
Outdoor Unit			GUHD12NK3C1O	GUHD18NK3C1O	GUHD24NK3C1O
Power Supply		-	220-240V-50Hz-1Ph		
Heat Exchange		-	Cross Fin Coil		
Fan	Type	-	Axial fan		
	Fan Motor Speed	rpm	900	840	840
Compressor	Type	-	ROTARY	ROTARY	ROTARY
	Power Input	W	1070	1630	2200
Refrigerant	Type	-	R410A		
	Control	-	Caplllary Tube	Electronic Expansion Valve	
	Charge	kg	1.25	1.4	2.4
Dimensions (W×H×D)		mm	848×540×320	955×700×396	980×790×427
(Outline/Package)			881×595×363	1029× 750×458	1083×855×488
Weight(Net/Gross)		kg	33/37	46/51	65/70
Piping Connections	Liquid	Inch	Φ1/4	Φ1/4	Φ3/8
	Gas	Inch	Φ3/8	Φ1/2	Φ5/8
	Max. Length	m	20	20	30
	Max. Height	m	15	15	15

Continued 1

Model	Indoor unit		GKH30K3CI	GKH36K3CI	GKH42K3CI
	Outdoor unit		GUHD30NK3CO	GUHD36NK3CO	GUHD42NK3CO
Nominal Capacity	Cooling	kW	8.8	10	11
		Btu/h	30000	34120	37530
	Heating	kW	9.5	11.0	12.0
		Btu/h	32400	37532	40944
Power Input	Cooling	kW	2.74	3.115	3.42
	Heating	kW	2.63	3.047	3.324
EER/COP		W/W	3.21/3.61	3.21/3.61	3.21/3.61
Indoor Unit			GKH30K3CI	GKH36K3CI	GKH42K3CI
Power Supply		-	220-240V-50Hz-1Ph		
Heat Exchange		-	Cross Fin Coil		
Fan	Type	-	Centrifugal fan		
	Drive	-	direct	direct	direct
	Motor Output	kW	0.060×1	0.06	0.06
	Air Flow	m^3/h	1660/1570/1500	1660/1570/1500	1660/1570/1500
Sound Pressure Level(H/M/L)		dB(A)	53/51/48	53/51/48	53/51/48
Air Filter		-	Standard washable synthetic		
Drain Piping		mm	Φ32×3	Φ32×3	Φ32×3
Indoor Unit Dimensions (Outline/Package) (W×H×D)		mm	840×320×840	840×320×840/	840×320×840/
			963×409×963	963×409×963	963×409×963
Weight(Net/Gross)		kg	32/43	32/43	32/43
Panel Dimensions (Outline/Package) (W×H×D)		mm	950×60×950/	950×60×950/	950×60×950
			1028×130×1043	1028×130×1043	1028×130×1043
Panel Weight(Net/Gross)		kg	6.5/10	6.5/10	6.5/10
Outdoor Unit			GUHD30NK3CO	GUHD36NK3CO	GUHD42NK3CO
Power Supply		-	220-240V-50Hz-1Ph		
Heat Exchange		-	Cross Fin Coil		
Fan	Type	-	Axial fan		
	Fan Motor Speed	rpm	780±20	820±20	
Compressor	Type	-	ROTARY	ROTARY	
	Power Input	W	2200	3010±7.5%	
Refrigerant	Type	-	R410A		
	Control	-	Electronic Expansion Valve		
	Charge	kg	2.6	3.8	3.8
Dimensions (W×H×D) (Outline/Package)		mm	980×790×427	1107×1100×440	
			1083×855×488	1158×1235×493	
Weight(Net/Gross)		kg	68/74	90/101	90/101
Piping Connections	Liquid	Inch	Φ3/8	Φ3/8	Φ3/8
	Gas	Inch	Φ5/8	Φ5/8	Φ5/8
	Max. Length	m	30	30	50
	Max. Height	m	15	15	30

Continued 2

Model	Indoor unit		GKH30K3CI	GKH36K3CI	GKH42K3CI
	Outdoor unit		GUHD30NK3C1O	GUHD36NK3C1O	GUHD42NK3C1O
Nominal Capacity	Cooling	kW	8.8	10.0	11
		Btu/h	30000	34100	37530
	Heating	kW	9.5	11.0	12.0
		Btu/h	32400	37500	40944
Power Input	Cooling	kW	2.74	3.115	3.426
	Heating	kW	2.63	3.047	3.3
EER/COP		W/W	3.21/3.61	3.21/3.61	3.21/3.61
Indoor Unit			GKH30K3CI	GKH36K3CI	GKH42K3CI
Power Supply		-	220-240V-50Hz-1Ph		
Heat Exchange		-	Cross Fin Coil		
Fan	Type	-	Centrifugal fan		
	Drive	-	direct	direct	direct
	Motor Output	kW	0.060×1	0.06	0.06
	Air Flow	m^3/h	1660/1570/1500	1660/1570/1500	1660/1570/1500
Sound Pressure Level(H/M/L)		dB(A)	53/51/48	53/51/48	53/51/48
Air Filter		-	Standard washable synthetic		
Drain Piping		mm	Φ32×3	Φ32×3	Φ32×3
Indoor Unit Dimensions (Outline/Package) (W×H×D)		mm	840×320×840	840×320×840	840×320×840/
			963×409×963	963×409×963	963×409×963
Weight(Net/Gross)		kg	32/43	32/43	32/43
Panel Dimensions (Outline/Package) (W×H×D)		mm	950×60×950	950×60×950	950×60×950
			1028×130×1043	1028×130×1043	1028×130×1043
Panel Weight(Net/Gross)		kg	6.5/10	6.5/10	6.5/10
Outdoor Unit			GUHD30NK3C1O	GUHD36NK3C1O	GUHD42NK3C1O
Power Supply		-	220-240V-50Hz-1Ph		
Heat Exchange		-	Cross Fin Coil		
Fan	Type	-	Axial fan		
	Fan Motor Speed	rpm	840	900	
Compressor	Type	-	ROTARY	ROTARY	
	Power Input	W	2200	3010±7.5%	
Refrigerant	Type	-	R410A		
	Control	-	Electronic Expansion Valve		
	Charge	kg	2.6	3.8	3.8
Dimensions (W×H×D) (Outline/Package)		mm	980×790×427	1107×1100×440	
			1083×855×488	1158×1235×493	
Weight(Net/Gross)		kg	68/74	89/100	89/100
Piping Connections	Liquid	Inch	Φ3/8	Φ3/8	Φ3/8
	Gas	Inch	Φ5/8	Φ5/8	Φ5/8
	Max. Length	m	30	30	50
	Max. Height	m	15	15	30

Continued 3

Model	Indoor unit		GKH36K3CI	GKH42K3CI
	Outdoor unit		GUHD36NM3CO	GUHD42NM3CO
Nominal Capacity	Cooling	kW	10	11
		Btu/h	34120	37530
	Heating	kW	11.0	12.0
		Btu/h	37532	42300
Power Input	Cooling	kW	3.115	3.42
	Heating	kW	3.047	3.324
EER/COP		W/W	3.21/3.61	3.21/3.61
Indoor Unit			GKH36K3CI	GKH42K3CI
Power Supply		–	220-240V-50Hz-1Ph	
Heat Exchange		–	Cross Fin Coil	Cross Fin Coil
Fan	Type	–	Centrifugal fan	Centrifugal fan
	Drive	–	direct	direct
	Motor Output	kW	0.06	0.06
	Air Flow	m^3/h	1660/1570/1500	1660/1570/1500
Sound Pressure Level(H/M/L)		dB(A)	53/51/48	53/51/48
Air Filter		–	Standard washable synthetic	
Drain Piping		mm	Φ32×3	Φ32×3
Indoor Unit Dimensions		mm	840×320×840	840×320×840
(Outline/Package) (W×H×D)			963×409×963	963×409×963
Weight(Net/Gross)		kg	32/43	32/43
Panel Dimensions (Outline/Package) (W×H×D)		mm	950×60×950	950×60×950
			11028×130×1043	1028×130×1043
Panel Weight(Net/Gross)		kg	6.5/10	6.5/10
Outdoor Unit			GUHD36NM3CO	GUHD42NM3CO
Power Supply		–	380-4150V-50Hz-3Ph	380-4150V-50Hz-3Ph
Heat Exchange		–	Cross Fin Coil	Cross Fin Coil
Fan	Type	–	Axial fan	Axial fan
	Fan Motor Speed	rpm	820±20	820±20
Compressor	Type	–	ROTARY	ROTARY
	Power Input	W	3010±7.5%	3010±7.5%
Refrigerant	Type	–	R410A	R410A
	Control	–	Electronic Expansion Valve	
	Charge	kg	3.8	3.8
Dimensions (W×H×D) (Outline/Package)		mm	1107×1100×440	1107×1100×440
			1158×1235×493	1158×1235×493
Weight(Net/Gross)		kg	92/103	92/103
Piping Connections	Liquid	Inch	Φ3/8	Φ3/8
	Gas	Inch	Φ5/8	Φ5/8
	Max. Length	m	30	50
	Max. Height	m	15	30

Continued 4

Model	Indoor unit		GKH36K3CI	GKH42K3CI
	Outdoor unit		GUHD36NM3C1O	GUHD42NM3C1O
Nominal Capacity	Cooling	kW	10.0	11.0
		Btu/h	34100	37530
	Heating	kW	11.0	12.0
		Btu/h	37500	40944
Power Input	Cooling	kW	3.115	3.425
	Heating	kW	3.047	3.3
EER/COP		W/W	3.21/3.61	3.21/3.61
Indoor Unit			GKH36K3CI	GKH42K3CI
Power Supply		-	220-240V-50Hz-1Ph	
Heat Exchange		-	Cross Fin Coil	Cross Fin Coil
Fan	Type	-	Centrifugal fan	Centrifugal fan
	Drive	-	direct	direct
	Motor Output	kW	0.06	0.06
	Air Flow	m^3/h	1660/1570/1500	1660/1570/1500
Sound Pressure Level(H/M/L)		dB(A)	53/51/48	53/51/48
Air Filter		-	Standard washable synthetic	
Drain Piping		mm	Φ32×3	Φ32×3
Indoor Unit Dimensions (Outline/Package) (W×H×D)		mm	840×320×840	840×320×840
			963×409×963	963×409×963
Weight(Net/Gross)		kg	32/43	32/43
Panel Dimensions (Outline/Package) (W×H×D)		mm	950×60×950	950×60×950
			1028×130×1043	1028×130×1043
Panel Weight(Net/Gross)		kg	6.5/10	6.5/10
Outdoor Unit			GUHD36NM3C1O	GUHD42NM3C1O
Power Supply		-	380-4150V-50Hz-3Ph	380-4150V-50Hz-3Ph
Heat Exchange		-	Cross Fin Coil	Cross Fin Coil
Fan	Type	-	Axial fan	Axial fan
	Fan Motor Speed	rpm	900	900
Compressor	Type	-	ROTARY	ROTARY
	Power Input	W	3010±7.5%	3010±7.5%
Refrigerant	Type	-	R410A	R410A
	Control	-	Electronic Expansion Valve	
	Charge	kg	3.8	3.8
Dimensions (W×H×D) (Outline/Package)		mm	1107×1100×440	1107×1100×440
			1158×1235×493	1158×1235×493
Weight(Net/Gross)		kg	88/99	88/99
Piping Connections	Liquid	Inch	Φ3/8	Φ3/8
	Gas	Inch	Φ5/8	Φ5/8
	Max. Length	m	30	50
	Max. Height	m	15	30

(3) Floor-ceiling type

Model	Indoor unit		GTH09K3CI	GTH12K3CI
	Outdoor unit		GUHD09NK3CO	GUHD12NK3CO
Nominal Capacity	Cooling	kW	3.0	3.4
		Btu/h	10236	11600
	Heating	kW	3.0	3.8
		Btu/h	10236	13000
Power Input	Cooling	kW	0.857	1.059
	Heating	kW	0.75	0.927
EER/COP		W/W	3.5/4.0	3.21/4.1
Indoor Unit			GTH09K3CI	GTH12K3CI
Power Supply		-	220-240V-50Hz-1Ph	
Heat Exchange		-	Cross Fin Coil	
Fan	Type	-	Centrifugal fan	
	Drive	-	Direct	
	Motor Output	kW	0.008×1	0.015×1
	Air Flow	m3/h	650/550/450	700/600/500
Sound Pressure Level(H/M/L)		dB(A)	39/37/35	39/37/35
Air Filter		-	Standard washable synthetic	
Drain Piping		mm	Φ17×1.75	Φ17×1.75
Dimensions (W×H×D) (Outline/Package)		mm	1220×225×700	1220×225×700
			1343×315× 823	1343×315× 823
Weight(Net/Gross)		kg	40/49	40/49
Outdoor Unit			GUHD09NK3CO	GUHD12NK3CO
Power Supply		-	220-240V-50Hz-1Ph	
Heat Exchange		-	Cross Fin Coil	
Fan	Type	-	Axial fan	
	Fan Motor Speed	rpm	850	850
Compressor	Type	-	ROTARY	ROTARY
	Power Input	W	1070	1070
Refrigerant	Type	-	R410A	
	Control	-	Capillary Tube	
	Charge	kg	1.2	1.35
Dimensions (W×H×D) (Outline/Package)		mm	776 ×540×320	776 ×540×320
			851×595×363	851×595×363
Weight(Net/Gross)		kg	28/32	30/34
Piping Connections	Liquid	Inch	Φ1/4	Φ1/4
	Gas	Inch	Φ3/8	Φ3/8
	Max. Length	m	20	20
	Max. Height	m	15	15

Continued

Model	Indoor unit		GTH09K3CI	GTH12K3CI
	Outdoor unit		GUHD09NK3C1O	GUHD12NK3C1O
Nominal Capacity	Cooling	kW	3.0	3.4
		Btu/h	10236	11600
	Heating	kW	3.0	3.8
		Btu/h	10236	13000
Power Input	Cooling	kW	0.857	1.059
	Heating	kW	0.75	0.927
EER/COP		W/W	3.5/4.0	3.21/4.1
Indoor Unit			GTH09K3CI	GTH12K3CI
Power Supply		-	220-240V-50Hz-1Ph	
Heat Exchange		-	Cross Fin Coil	
Fan	Type	-	Centrifugal fan	
	Drive	-	Direct	
	Motor Output	kW	0.008×1	0.015×1
	Air Flow	m^3/h	650/550/450	700/600/500
Sound Pressure Level(H/M/L)		dB(A)	39/37/35	39/37/35
Air Filter			Standard washable synthetic	
Drain Piping		mm	Φ17×1.75	Φ17×1.75
Dimensions (W×H×D) (Outline/Package)		mm	1220×225×700	1220×225×700
			1345×315× 823	1345×315× 823
Weight(Net/Gross)		kg	40/49	40/49
Outdoor Unit			GUHD09NK3C1O	GUHD12NK3C1O
Power Supply		-	220-240V-50Hz-1Ph	
Heat Exchange		-	Cross Fin Coil	
Fan	Type	-	Axial fan	
	Fan Motor Speed	rpm	900	900
Compressor	Type		ROTARY	ROTARY
	Power Input	W	1070	1070
Refrigerant	Type	-	R410A	
	Control	-	Capillary Tube	
	Charge	kg	1.2	1.25
Dimensions (W×H×D) (Outline/Package)		mm	848×540×320	848×540×320
			881×595×363	881×595×363
Weight(Net/Gross)		kg	33/37	33/37
Piping Connections	Liquid	Inch	Φ1/4	Φ1/4
	Gas	Inch	Φ3/8	Φ3/8
	Max. Length	m	20	20
	Max. Height	m	15	15

Continued 1

Model	Indoor unit		GTH18K3CI	GTH24K3CI	GTH30K3CI
	Outdoor unit		GUHD18NK3CO	GUHD24NK3CO	GUHD30NK3CO
Nominal Capacity	Cooling	kW	5.3	7	8.8
		Btu/h	18000	24000	30000
	Heating	kW	6.15	8	9.5
		Btu/h	21000	27000	32400
Power Input	Cooling	kW	1.65	2.18	2.74
	Heating	kW	1.7	2.21	2.63
EER/COP		W/W	3.21/3.62	3.21/3.62	3.21/3.61
Indoor Unit			GTH18K3CI	GTH24K3CI	GTH30K3CI
Power Supply		-	220-240V-50Hz-1Ph		
Heat Exchange		-	Cross Fin Coil		
Fan	Type	-	Centrifugal fan		
	Drive	-	Direct	Direct	Direct
	Motor Output	kW	0.02×1	0.05×1	0.075×1
	Air Flow	m^3/h	900/800/700	1200/1050/900	1600/1450/1300
Sound Pressure Level(H/M/L)		dB(A)	45/42/39	52/49/46	50/48/46
Air Filter		-	Standard washable synthetic		
Drain Piping		mm	Φ17×1.75	Φ17×1.75	Φ17×1.75
Dimensions (W×H×D) (Outline/Package)		mm	1220×225×700	1220×225×700	1420×245×700
			1343×315×823	1343×315×823	1548×345×828
Weight(Net/Gross)		kg	42/51	43/52	51/58
Outdoor Unit			GUHD18NK3CO	GUHD24NK3CO	GUHD30NK3CO
Power Supply		-	220-240V-50Hz-1Ph		
Heat Exchange		-	Cross Fin Coil		
Fan	Type	-	Axial fan		
	Fan Motor Speed	rpm	690±15	780±20	780±20
Compressor	Type	-	ROTARY	ROTARY	ROTARY
	Power Input	W	1630	2200	2200
Refrigerant	Type	-	R410A		
	Control	-	Electronic Expansion Valve		
	Charge	kg	1.4	2.4	2.6
Dimensions (W×H×D) (Outline/Package)		mm	955×700×396	980×790×427	980×790×427
			1029× 750×458	1083×855×488	1083×855×488
Weight(Net/Gross)		kg	48/53	65/70	68/74
Piping Connections	Liquid	Inch	Φ1/4	Φ3/8	Φ3/8
	Gas	Inch	Φ1/2	Φ5/8	Φ5/8
	Max. Length	m	20	30	30
	Max. Height	m	15	15	15

Continued 2

Model	Indoor unit		GTH18K3CI	GTH24K3CI	GTH30K3CI
	Outdoor unit		GUHD18NK3C1O	GUHD24NK3C1O	GUHD30NK3C1O
Nominal Capacity	Cooling	kW	5.3	7	8.8
		Btu/h	18000	24000	30000
	Heating	kW	6.15	8	9.5
		Btu/h	21000	27000	32400
Power Input	Cooling	kW	1.65	2.18	2.74
	Heating	kW	1.7	2.21	2.63
EER/COP		W/W	3.21/3.61	3.21/3.62	3.21/3.61
Indoor Unit			GTH18K3CI	GTH24K3CI	GTH30K3CI
Power Supply		-	220-240V-50Hz-1Ph		
Heat Exchange		-	Cross Fin Coil		
Fan	Type	-	Centrifugal fan		
	Drive	-	Direct	Direct	Direct
	Motor Output	kW	0.02×1	0.05×1	0.075×1
	Air Flow	m3/h	900/800/700	1200/1050/900	1600/1450/1300
Sound Pressure Level(H/M/L)		dB(A)	45/42/39	52/49/46	50/48/46
Air Filter		-	Standard washable synthetic		
Drain Piping		mm	Φ17×1.75	Φ17×1.75	Φ17×1.75
Dimensions (W×H×D) (Outline/Package)		mm	1220×225×700	1220×225×700	1420×245×700
			1343×315×823	1343×315×823	1548×345×828
Weight(Net/Gross)		kg	42/51	43/52	51/58
Outdoor Unit			GUHD18NK3C1O	GUHD24NK3C1O	GUHD30NK3C1O
Power Supply		-	220-240V-50Hz-1Ph		
Heat Exchange		-	Cross Fin Coil		
Fan	Type	-	Axial fan		
	Fan Motor Speed	rpm	840	840	840
Compressor	Type	-	ROTARY	ROTARY	ROTARY
	Power Input	W	1630	2200	2200
Refrigerant	Type	-	R410A		
	Control	-	Electronic Expansion Valve		
	Charge	kg	1.4	2.4	2.6
Dimensions (W×H×D) (Outline/Package)		mm	955×700×396	980×790×427	980×790×427
			1029× 750×458	1083×855×488	1083×855×488
Weight(Net/Gross)		kg	46/51	65/70	68/74
Piping Connections	Liquid	Inch	Φ1/4	Φ3/8	Φ3/8
	Gas	Inch	Φ1/2	Φ5/8	Φ5/8
	Max. Length	m	20	30	30
	Max. Height	m	15	15	15

Continued 3

Model	Indoor unit		GTH36K3CI	GTH42K3CI	GTH36K3CI
	Outdoor unit		GUHD36NK3CO	GUHD42NK3CO	GUHD36NM3CO
Nominal Capacity	Cooling	kW	10.5	11.5	10.5
		Btu/h	35826	39238	35800
	Heating	kW	11.5	12.5	11.5
		Btu/h	39238	42650	39238
Power Input	Cooling	kW	3.27	3.58	3.27
	Heating	kW	3.18	3.46	3.18
EER/COP		W/W	3.21/3.61	3.21/3.61	3.21/3.61
Indoor Unit			GTH36K3CI	GTH42K3CI	GTH36K3CI
Power Supply		-	220-240V-50Hz-1Ph		220-240V-50Hz-1Ph
Heat Exchange		-	Cross Fin Coil		Cross Fin Coil
Fan	Type	-	Centrifugal fan		Centrifugal fan
	Drive	-	Direct	Direct	Direct
	Motor Output	kW	0.15	0.15	0.15
	Air Flow	m3/h	2000/1630/1520	2000/1630/1520	2000/1630/1520
Sound Pressure Level(H/M/L)		dB(A)	54/51/48	54/51/48	54/51/48
Air Filter		-	Standard washable synthetic		
Drain Piping		mm	Φ17×1.75	Φ17×1.75	Φ17×1.75
Dimensions (W×H×D) (Outline/Package)		mm	1420×245×700	1420×245×700	1420×245×700
			1548×345×828	1548×345×828	1548×345×828
Weight(Net/Gross)		kg	53/61	55/63	53/61
Outdoor Unit			GUHD36NK3CO	GUHD42NK3CO	GUHD36NM3CO
Power Supply		-	220-240V-50Hz-1Ph		380-415V-50Hz-3Ph
Heat Exchange		-	Cross Fin Coil		Cross Fin Coil
Fan	Type	-	Axial fan		Axial fan
	Fan Motor Speed	rpm	820±20		820±20
Compressor	Type	-	ROTARY		ROTARY
	Power Input	W	3010±7.5%		3010±7.5%
Refrigerant	Type	-	R410A		R410A
	Control	-	Electronic Expansion Valve		
	Charge	kg	3.8	3.8	3.8
Dimensions (W×H×D) (Outline/Package)		mm	1107×1100×440		1107×1100×440
			1158×1235×493		1158×1235×493
Weight(Net/Gross)		kg	90/101	90/101	92/103
Piping Connections	Liquid	Inch	Φ3/8	Φ3/8	Φ3/8
	Gas	Inch	Φ5/8	Φ5/8	Φ5/8
	Max. Length	m	30	50	30
	Max. Height	m	15	30	15

Continued 4

Model	Indoor unit		GTH36K3CI	GTH42K3CI	GTH36K3CI
	Outdoor unit		GUHD36NK3C1O	GUHD42NK3C1O	GUHD36NM3C1O
Nominal Capacity	Cooling	kW	10.5	11.5	10.5
		Btu/h	35800	39238	35800
	Heating	kW	11.2	12.5	11.2
		Btu/h	38200	42650	38200
Power Input	Cooling	kW	3.27	3.58	3.27
	Heating	kW	3.10	3.46	3.10
EER/COP		W/W	3.21/3.61	3.21/3.61	3.21/3.61
Indoor Unit			GTH36K3CI	GTH42K3CI	GTH36K3CI
Power Supply		-	220-240V-50Hz-1Ph		220-240V-50Hz-1Ph
Heat Exchange		-	Cross Fin Coil		Cross Fin Coil
Fan	Type	-	Centrifugal fan		Centrifugal fan
	Drive	-	Direct	Direct	Direct
	Motor Output	kW	0.15	0.15	0.15
	Air Flow	m^3/h	2000/1630/1520	2000/1630/1520	2000/1630/1520
Sound Pressure Level(H/M/L)		dB(A)	54/51/48	54/51/48	54/51/48
Air Filter		-	Standard washable synthetic		
Drain Piping		mm	Φ17×1.75	Φ17×1.75	Φ17×1.75
Dimensions (W×H×D) (Outline/Package)		mm	1420×245×700	1420×245×700	1420×245×700
			1548×345×828	1548×345×828	1548×345×828
Weight(Net/Gross)		kg	53/61	55/63	53/61
Outdoor Unit			GUHD36NK3C1O	GUHD42NK3C1O	GUHD36NM3C1O
Power Supply		-	220-240V-50Hz-1Ph		380-415V-50Hz-3Ph
Heat Exchange		-	Cross Fin Coil		Cross Fin Coil
Fan	Type	-	Axial fan		Axial fan
	Fan Motor Speed	rpm	900		900
Compressor	Type		ROTARY		ROTARY
	Power Input	W	3010±7.5%		3010±7.5%
Refrigerant	Type	-	R410A		R410A
	Control	-	Electronic Expansion Valve		
	Charge	kg	3.8	3.8	3.8
Dimensions (W×H×D) (Outline/Package)		mm	1107×1100×440		1107×1100×440
			1158×1235×493		1158×1235×493
Weight(Net/Gross)		kg	89/100	89/100	88/99
Piping Connections	Liquid	Inch	Φ3/8	Φ3/8	Φ3/8
	Gas	Inch	Φ5/8	Φ5/8	Φ5/8
	Max. Length	m	30	50	30
	Max. Height	m	15	30	15

Continued 5

Model					
	Indoor unit		GTH42K3CI	GTH48K3CI	GTH48K3CI
	Product Code		ED020N0310	ED020N0230	ED020N0230
	Outdoor unit		GUHD42NM3CO	GUHD48NM3CO	GUHD48NK3CO
	Product Code		CF090W0421	CF090W0430	CF090W0320
Nominal Capacity	Cooling	kW	11.5	14	14
		Btu/h	39238	48000	48000
	Heating	kW	12.5	16.5	16.5
		Btu/h	42650	56300	56300
Power Input	Cooling	kW	3.58	4.2	4.2
	Heating	kW	3.46	4.4	4.4
EER/COP		W/W	3.21/3.61	3.33/3.75	3.33/3.75
Indoor Unit			GTH42K3CI	GTH48K3CI	GTH48K3CI
Power Supply		-	220-240V-50Hz-1Ph		
Heat Exchange		-	Cross Fin Coil		
Fan	Type	-	Centrifugal fan		
	Drive	-	Direct		
	Motor Output	kW	0.15	0.18	0.18
	Air Flow	m^3/h	2000/1630/1520	2300/2100/1900	2300/2100/1900
Sound Pressure Level(H/M/L)		dB(A)	54/51/48	58/55/52	58/55/52
Air Filter			Standard washable synthetic		
Drain Piping		mm	Φ17×2.5	Φ17×1.75	Φ17×1.75
Dimensions (W×H×D) (Outline/Package)		mm	1420×245×700	1700×245×700	1700×245×700
			1548×345×828	1828×345×828	1828×345×828
Weight(Net/Gross)		kg	55/63	64/72	64/72
Outdoor Unit			GUHD42NM3CO	GUHD48NM3CO	GUHD48NK3CO
Power Supply		-	380-415V-50Hz-3Ph		
Heat Exchange		-	Cross Fin Coil		Cross Fin Coil
Fan	Type	-	Axial fan		Axial fan
	Fan Motor Speed	rpm	820±20	690	690
Compressor	Type	-	ROTARY		ROTARY
	Power Input	W	3010±7.5%	4220	4220
Refrigerant	Type	-	R410A		
	Control	-	Electronic Expansion Valve		
	Charge	kg	3.8	4.3	4.3
Dimensions (W×H×D) (Outline/Package)		mm	1107×1100×440	1085×1365×427	1085×1365×427
			1158×1235×493	1143×1505×478	1143×1505×478
Weight(Net/Gross)		kg	92/103	116/128	116/128
Piping Connections	Liquid	Inch	Φ3/8"	Φ3/8"	Φ3/8
	Gas	Inch	Φ5/8"	Φ5/8"	Φ5/8
	Max. Length	m	50	50	50
	Max. Height	m	30	30	30

Continued 6

Model					
	Indoor unit		GTH42K3CI	GTH48K3CI	GTH48K3CI
	Product Code		ED020N0310	ED020N0230	ED020N0230
	Outdoor unit		GUHD42NM3C1O	GUHD48NM3C1O	GUHD48NK3C1O
	Product Code		CF090W0570	CF090W0580	CF090W0550
Nominal Capacity	Cooling	kW	11.3	14	14
		Btu/h	38555	48000	48000
	Heating	kW	12.5	16.0	16.0
		Btu/h	42650	54600	54600
Power Input	Cooling	kW	3.52	4.36	4.36
	Heating	kW	3.46	4.43	4.43
EER/COP		W/W	3.21/3.61	3.21/3.61	3.21/3.61
Indoor Unit			GTH42K3CI	GTH48K3CI	GTH48K3CI
Power Supply		-	220-240V-50Hz-1Ph		
Heat Exchange		-	Cross Fin Coil		
Fan	Type	-	Centrifugal fan		
	Drive	-	Direct		
	Motor Output	kW	0.15	0.18	0.18
	Air Flow	m^3/h	2000/1630/1520	2300/2100/1900	2300/2100/1900
Sound Pressure Level(H/M/L)		dB(A)	54/51/48	58/55/52	58/55/52
Air Filter		-	Standard washable synthetic		
Drain Piping		mm	Φ17×1.75	Φ17×1.75	Φ17×1.75
Dimensions (W×H×D) (Outline/Package)		mm	1420×245×700	1700×245×700	
			1548×345×828	1828×345×828	
Weight(Net/Gross)		kg	55/63	64/72	64/72
Outdoor Unit			GUHD42NM3C1O	GUHD48NM3C1O	GUHD48NK3C1O
Power Supply		-	380-415V-50Hz-3Ph		220-240V-50Hz-1Ph
Heat Exchange		-	Cross Fin Coil		
Fan	Type	-	Axial fan		
	Fan Motor Speed	rpm	900	840	840
Compressor	Type		ROTARY		ROTARY
	Power Input	W	3010±7.5%	4220	4220
Refrigerant	Type	-	R410A		
	Control	-	Electronic Expansion Valve		
	Charge	kg	3.8	4.3	4.3
Dimensions (W×H×D) (Outline/Package)		mm	1107×1100×440	1085×1365×427	
		mm	1158×1235×493	1143×1505×478	
Weight(Net/Gross)		kg	88/99	116/128	116/128
Piping Connections	Liquid	Inch	Φ3/8	Φ3/8	Φ3/8
	Gas	Inch	Φ5/8	Φ5/8	Φ5/8
	Max. Length	m	50	50	50
	Max. Height	m	30	30	30

Continued 7

Model	Indoor unit		GTH60K3CI	GTH60K3CI
	Outdoor unit		GUHD60NM3CO	GUHD60NM3C1O
Nominal Capacity	Cooling	kW	16	16
		Btu/h	54500	54500
	Heating	kW	17.5	17.5
		Btu/h	59700	59700
Power Input	Cooling	kW	4.98	4.98
	Heating	kW	4.84	4.84
EER/COP		W/W	3.21/3.62	3.21/3.62
Indoor Unit			GTH60K3CI	GTH60K3CI
Power Supply		-	220-240V-50Hz-1Ph	
Heat Exchange		-	Cross Fin Coil	
Fan	Type	-	Centrifugal fan	
	Drive	-	Direct	Direct
	Motor Output	kW	0.25×1	0.25×1
	Air Flow	m3/h	2300/2100/1900	2300/2100/1900
Sound Pressure Level(H/M/L)		dB(A)	58/55/52	58/55/52
Air Filter		-	Standard washable synthetic	
Drain Piping		mm	Φ17×1.75	Φ17×1.75
Dimensions (W×H×D) (Outline/Package)		mm	1700×245×700	1700×245×700
			1828×345×828	1828×345×828
Weight(Net/Gross)		kg	65/73	65/73
Outdoor Unit			GUHD60NM3CO	GUHD60NM3C1O
Power Supply		-	380-4150V-50Hz-3Ph	
Heat Exchange		-	Cross Fin Coil	
Fan	Type	-	Axial fan	
	Fan Motor Speed	rpm	800±20	840
Compressor	Type	-	ROTARY	ROTARY
	Power Input	W	4220	4220
Refrigerant	Type	-	R410A	
	Control	-	Electronic Expansion Valve	
	Charge	kg	5.5	5.5
Dimensions (W×H×D) (Outline/Package)		mm	1085×1365×427	1085×1365×427
			1143×1505×478	1143×1505×478
Weight(Net/Gross)		kg	121/133	118/130
Piping Connections	Liquid	Inch	Φ3/8	Φ3/8
	Gas	Inch	Φ3/4	Φ3/4
	Max. Length	m	50	50
	Max. Height	m	30	30

Note:
1. The design of this unit conforms to the requirements of EN14511 standard.
2. The air volume is measured at the relevant standard external static pressure.
3. Cooling (heating) capacity stated above is measured under nominal working conditions corresponding to standard external static pressure. The parameters are subject to change with the improvement of products, in which case the values on nameplate shall prevail.

Mode	Indoor	Outdoor
Cooling	DB:27℃ (80.6 ℉) WB:19℃ C (66.2 ℉)	DB:35℃ (95 ℉) WB:24℃ (75.2 ℉)
Heating	DB:20℃ C (68 ℉) WB:--℃ (-- ℉)	DB:7℃ (44.6 ℉) WB:6℃ (42.8 ℉)
Piping Length	5m	

4.2 Operation Range ℃ (℉)

Mode	Range of Outdoor Temperature ℉ (℃)
Cooling	64 ℉ (18℃)—118 ℉ (48℃)
Heating	5 ℉ (-15℃)—75 ℉ (24℃)

4.3 Cooling Performence

(1) Duct Type

GFH09K3CI

Fan speed	Air Flow Rate		ESP		Entering Air DBT		Outdoor Air Dry Bulb Temperature 95 ℉ (35℃)											
							Indoor Air Wet Bulb Temperature ℉ (℃)											
							62 ℉ (17℃)				67 ℉ (19℃)				72 ℉ (22℃)			
							Total Capacity		Sensible Capacity		Total Capacity		Sensible Capacity		Total Capacity		Sensible Capacity	
	m^3/h	cfm	Pa	in.wg	℃	℉	kW	KBtu /h	kW	KBtu /h	kW	KBtu /h	kW	KBtu /h	kW	KBtu /h	kW	KBtu /h
Hight Speed	1250	736	0	0	23	73.4	2.26	7.71	1.69	5.78	2.57	8.76	1.80	6.13	2.64	9.02	1.43	4.87
					24	75.2	2.28	7.79	1.83	6.23	2.59	8.85	1.89	6.46	2.67	9.12	1.58	5.38
					27	80.6	2.31	7.87	1.87	6.37	2.62	8.94	1.99	6.79	2.70	9.21	1.75	5.98
					31	87.8	2.33	7.95	1.96	6.67	2.65	9.03	2.09	7.13	2.73	9.30	1.91	6.51
	1100	647	15	0.06	23	73.4	2.12	7.25	1.59	5.44	2.41	8.24	1.62	5.52	2.49	8.48	1.34	4.58
					24	75.2	2.15	7.32	1.72	5.86	2.44	8.32	1.68	5.74	2.51	8.57	1.48	5.06
					27	80.6	2.17	7.39	1.76	5.99	2.46	8.40	1.77	6.05	2.54	8.66	1.65	5.63
					31	87.8	2.19	7.47	1.84	6.27	2.49	8.49	1.84	6.28	2.56	8.74	1.79	6.12
	1000	589	25	0.1	23	73.4	1.94	6.63	1.46	4.97	2.21	7.53	1.39	4.75	2.27	7.76	1.23	4.19
					24	75.2	1.96	6.70	1.57	5.36	2.23	7.61	1.47	5.02	2.30	7.84	1.36	4.63
					27	80.6	1.98	6.77	1.61	5.48	2.25	7.69	1.55	5.30	2.32	7.92	1.51	5.15
					31	87.8	2.00	6.83	1.68	5.74	2.28	7.76	1.62	5.51	2.34	8.00	1.64	5.60
Mid Speed	1100	647	0	0	23	73.4	2.214	7.5552	1.661	5.666	2.5162	8.585	1.761	6.01	2.592	8.843	1.4	4.775
					24	75.2	2.237	7.6323	1.79	6.106	2.5419	8.673	1.856	6.331	2.618	8.933	1.54	5.271
					27	80.6	2.259	7.7094	1.83	6.245	2.5676	8.761	1.9514	6.658	2.645	9.023	1.72	5.865
					31	87.8	2.282	7.7865	1.917	6.541	2.5933	8.848	2.049	6.99	2.671	9.114	1.87	6.38
	1000	589	15	0.06	23	73.4	2.081	7.1019	1.561	5.326	2.3653	8.07	1.585	5.407	2.436	8.312	1.32	4.489
					24	75.2	2.103	7.1743	1.682	5.739	2.3894	8.153	1.649	5.625	2.461	8.397	1.45	4.954
					27	80.6	2.124	7.2468	1.72	5.87	2.4135	8.235	1.7378	5.929	2.486	8.482	1.62	5.513
					31	87.8	2.145	7.3193	1.802	6.148	2.4377	8.317	1.804	6.155	2.511	8.567	1.76	5.997
	900	530	25	0.1	23	73.4	1.904	6.4975	1.428	4.873	2.164	7.383	1.363	4.652	2.229	7.605	1.2	4.107
					24	75.2	1.924	6.5638	1.539	5.251	2.1861	7.459	1.443	4.923	2.252	7.683	1.33	4.533
					27	80.6	1.943	6.6301	1.574	5.37	2.2081	7.534	1.5236	5.199	2.274	7.76	1.48	5.044
					31	87.8	1.963	6.6964	1.649	5.625	2.2302	7.61	1.583	5.403	2.297	7.838	1.61	5.486
Low Speed	1000	589	0	0	23	73.4	2.15	7.32	1.40	4.76	2.44	8.32	1.71	5.83	2.51	8.57	1.26	4.29
					24	75.2	2.17	7.40	1.54	5.25	2.46	8.41	1.80	6.14	2.54	8.66	1.40	4.76
					27	80.6	2.19	7.47	1.58	5.38	2.49	8.49	1.89	6.45	2.56	8.75	1.54	5.25
					31	87.8	2.21	7.55	1.64	5.59	2.51	8.58	1.99	6.78	2.59	8.83	1.68	5.74
	880	518	15	0.06	23	73.4	2.02	6.88	1.31	4.47	2.29	7.82	1.54	5.24	2.36	8.06	1.18	4.03
					24	75.2	2.04	6.95	1.45	4.94	2.32	7.90	1.60	5.45	2.39	8.14	1.31	4.48
					27	80.6	2.06	7.02	1.48	5.06	2.34	7.98	1.68	5.75	2.41	8.22	1.45	4.93
					31	87.8	2.08	7.10	1.54	5.25	2.36	8.06	1.75	5.97	2.43	8.30	1.58	5.40
	800	471	25	0.1	23	73.4	1.85	6.30	1.20	4.09	2.10	7.16	1.32	4.51	2.16	7.37	1.08	3.69
					24	75.2	1.86	6.36	1.32	4.52	2.12	7.23	1.40	4.77	2.18	7.45	1.20	4.10
					27	80.6	1.88	6.43	1.36	4.63	2.14	7.30	1.48	5.04	2.20	7.52	1.32	4.51
					31	87.8	1.90	6.49	1.41	4.80	2.16	7.38	1.53	5.24	2.23	7.60	1.45	4.94

Fan speed	Air Flow Rate		ESP		Entering Air DBT		Outdoor Air Dry Bulb Temperature 109 ℉ (43℃)											
							Indoor Air Wet Bulb Temperature ℉ (℃)											
							62 ℉ (17℃)				67 ℉ (19℃)				72 ℉ (22℃)			
							Total Capacity		Sensible Capacity		Total Capacity		Sensible Capacity		Total Capacity		Sensible Capacity	
	m^3/h	cfm	Pa	in.wg	℃	℉	kW	KBtu /h	kW	KBtu /h	kW	KBtu /h	kW	KBtu /h	kW	KBtu /h	kW	KBtu /h
Hight Speed	1250	736	0	0	23	73.4	1.92	6.55	1.44	4.91	2.18	7.45	1.53	5.21	2.25	7.67	1.21	4.14
					24	75.2	1.94	6.62	1.55	5.30	2.20	7.52	1.61	5.49	2.27	7.75	1.34	4.57
					27	80.6	1.96	6.69	1.59	5.42	2.23	7.60	1.69	5.77	2.29	7.83	1.49	5.09
					31	87.8	1.98	6.75	1.66	5.67	2.25	7.67	1.78	6.06	2.32	7.90	1.62	5.53
	1100	647	15	0.06	23	73.4	1.62	5.54	1.22	4.15	1.84	6.29	1.24	4.22	1.90	6.48	1.03	3.50
					24	75.2	1.83	6.23	1.46	4.98	2.08	7.08	1.43	4.89	2.14	7.29	1.26	4.30
					27	80.6	1.84	6.29	1.49	5.10	2.10	7.15	1.51	5.15	2.16	7.37	1.40	4.79
					31	87.8	1.86	6.36	1.56	5.34	2.12	7.22	1.57	5.35	2.18	7.44	1.53	5.21
	1000	589	25	0.1	23	73.4	1.72	5.86	1.29	4.39	1.95	6.66	1.23	4.19	2.01	6.86	1.09	3.70
					24	75.2	1.73	5.92	1.39	4.74	1.97	6.73	1.30	4.44	2.03	6.93	1.20	4.09
					27	80.6	1.75	5.98	1.42	4.84	1.99	6.79	1.37	4.69	2.05	7.00	1.33	4.55
					31	87.8	1.77	6.04	1.49	5.07	2.01	6.86	1.43	4.87	2.07	7.07	1.45	4.95
Mid Speed	1100	647	0	0	23	73.4	1.88	6.42	1.41	4.82	2.14	7.30	1.50	5.11	2.20	7.52	1.19	4.06
					24	75.2	1.90	6.49	1.52	5.19	2.16	7.37	1.58	5.38	2.23	7.59	1.31	4.48
					27	80.6	1.92	6.55	1.56	5.31	2.18	7.45	1.66	5.66	2.25	7.67	1.46	4.99
					31	87.8	1.94	6.62	1.63	5.56	2.20	7.52	1.74	5.94	2.27	7.75	1.59	5.42
	1000	589	15	0.06	23	73.4	1.59	5.43	1.19	4.07	1.81	6.17	1.21	4.13	1.86	6.35	1.01	3.43
					24	75.2	1.79	6.11	1.43	4.88	2.03	6.94	1.40	4.79	2.09	7.15	1.24	4.22
					27	80.6	1.81	6.17	1.46	5.00	2.05	7.01	1.48	5.05	2.12	7.22	1.38	4.69
					31	87.8	1.83	6.23	1.53	5.23	2.07	7.08	1.54	5.24	2.14	7.29	1.50	5.10
	900	530	25	0.1	23	73.4	1.68	5.74	1.26	4.31	1.91	6.52	1.20	4.11	1.97	6.72	1.06	3.63
					24	75.2	1.70	5.80	1.36	4.64	1.93	6.59	1.28	4.35	1.99	6.79	1.17	4.01
					27	80.6	1.72	5.86	1.39	4.75	1.95	6.66	1.35	4.59	2.01	6.86	1.31	4.46
					31	87.8	1.73	5.92	1.46	4.97	1.97	6.72	1.40	4.77	2.03	6.93	1.42	4.85
Low Speed	1000	589	0	0	23	73.4	1.82	6.23	1.19	4.05	2.07	7.07	1.45	4.95	2.14	7.29	1.07	3.64
					24	75.2	1.84	6.29	1.31	4.47	2.09	7.15	1.53	5.22	2.16	7.36	1.19	4.05
					27	80.6	1.86	6.35	1.34	4.57	2.12	7.22	1.61	5.49	2.18	7.44	1.31	4.46
					31	87.8	1.88	6.42	1.39	4.75	2.14	7.29	1.69	5.76	2.20	7.51	1.43	4.88
	880	518	15	0.06	23	73.4	1.54	5.26	1.00	3.42	1.75	5.98	1.17	4.01	1.80	6.16	0.90	3.08
					24	75.2	1.73	5.92	1.23	4.20	1.97	6.73	1.36	4.64	2.03	6.93	1.12	3.81
					27	80.6	1.75	5.98	1.26	4.30	1.99	6.79	1.43	4.89	2.05	7.00	1.23	4.20
					31	87.8	1.77	6.04	1.31	4.47	2.01	6.86	1.49	5.08	2.07	7.07	1.35	4.59
	800	471	25	0.1	23	73.4	1.63	5.57	1.06	3.62	1.85	6.33	1.17	3.98	1.91	6.51	0.95	3.26
					24	75.2	1.65	5.62	1.17	3.99	1.87	6.39	1.24	4.22	1.93	6.58	1.06	3.62
					27	80.6	1.66	5.68	1.20	4.09	1.89	6.45	1.31	4.45	1.95	6.65	1.17	3.99
					31	87.8	1.68	5.74	1.24	4.25	1.91	6.52	1.36	4.63	1.97	6.71	1.28	4.36

Fan speed	Air Flow Rate		ESP		Entering Air DBT		Outdoor Air Dry Bulb Temperature 118 ℉ (48℃)											
							Indoor Air Wet Bulb Temperature ℉ (℃)											
							62 ℉ (17℃)				67 ℉ (19℃)				72 ℉ (22℃)			
							Total Capacity		Sensible Capacity		Total Capacity		Sensible Capacity		Total Capacity		Sensible Capacity	
	m^3/h	cfm	Pa	in.wg	℃	℉	kW	KBtu /h	kW	KBtu /h	kW	KBtu /h	kW	KBtu /h	kW	KBtu /h	kW	KBtu /h
Hight Speed	1250	736	0	0	23	73.4	1.88	6.40	1.41	4.80	2.13	7.27	1.49	5.09	2.20	7.49	1.19	4.04
					24	75.2	1.89	6.46	1.52	5.17	2.15	7.35	1.57	5.36	2.22	7.57	1.31	4.46
					27	80.6	1.91	6.53	1.55	5.29	2.17	7.42	1.65	5.64	2.24	7.64	1.46	4.97
					31	87.8	1.93	6.59	1.62	5.54	2.20	7.49	1.74	5.92	2.26	7.72	1.58	5.40
	1100	647	15	0.06	23	73.4	1.52	5.19	1.14	3.89	1.73	5.90	1.16	3.95	1.78	6.08	0.96	3.28
					24	75.2	1.71	5.84	1.37	4.67	1.95	6.64	1.34	4.58	2.00	6.84	1.18	4.03
					27	80.6	1.73	5.90	1.40	4.78	1.97	6.70	1.41	4.83	2.02	6.91	1.32	4.49
					31	87.8	1.75	5.96	1.47	5.01	1.98	6.77	1.47	5.01	2.04	6.97	1.43	4.88
	1000	589	25	0.1	23	73.4	1.60	5.47	1.20	4.11	1.82	6.22	1.15	3.92	1.88	6.41	1.01	3.46
					24	75.2	1.62	5.53	1.30	4.42	1.84	6.28	1.22	4.15	1.90	6.47	1.12	3.82
					27	80.6	1.64	5.59	1.33	4.52	1.86	6.35	1.28	4.38	1.92	6.54	1.25	4.25
					31	87.8	1.65	5.64	1.39	4.74	1.88	6.41	1.33	4.55	1.94	6.60	1.35	4.62
Mid Speed	1100	647	0	0	23	73.4	1.84	6.27	1.38	4.70	2.09	7.13	1.46	4.99	2.15	7.34	1.16	3.96
					24	75.2	1.86	6.33	1.49	5.07	2.11	7.20	1.54	5.25	2.17	7.41	1.28	4.37
					27	80.6	1.88	6.40	1.52	5.18	2.13	7.27	1.62	5.53	2.20	7.49	1.43	4.87
					31	87.8	1.89	6.46	1.59	5.43	2.15	7.34	1.70	5.80	2.22	7.56	1.55	5.30
	1000	589	15	0.06	23	73.4	1.49	5.09	1.12	3.82	1.69	5.78	1.14	3.87	1.75	5.96	0.94	3.22
					24	75.2	1.68	5.72	1.34	4.58	1.91	6.50	1.32	4.49	1.96	6.70	1.16	3.95
					27	80.6	1.69	5.78	1.37	4.68	1.93	6.57	1.39	4.73	1.98	6.77	1.29	4.40
					31	87.8	1.71	5.84	1.44	4.91	1.94	6.64	1.44	4.91	2.00	6.84	1.40	4.78
	900	530	25	0.1	23	73.4	1.57	5.36	1.18	4.02	1.79	6.10	1.13	3.84	1.84	6.28	0.99	3.39
					24	75.2	1.59	5.42	1.27	4.34	1.80	6.16	1.19	4.06	1.86	6.34	1.10	3.74
					27	80.6	1.60	5.47	1.30	4.43	1.82	6.22	1.26	4.29	1.88	6.41	1.22	4.16
					31	87.8	1.62	5.53	1.36	4.64	1.84	6.28	1.31	4.46	1.90	6.47	1.33	4.53
Low Speed	1000	589	0	0	23	73.4	1.78	6.08	1.16	3.95	2.02	6.91	1.42	4.84	2.09	7.12	1.04	3.56
					24	75.2	1.80	6.14	1.28	4.36	2.05	6.98	1.49	5.09	2.11	7.19	1.16	3.95
					27	80.6	1.82	6.20	1.31	4.47	2.07	7.05	1.57	5.36	2.13	7.26	1.28	4.36
					31	87.8	1.84	6.26	1.36	4.64	2.09	7.12	1.65	5.62	2.15	7.33	1.40	4.77
	880	518	15	0.06	23	73.4	1.45	4.93	0.94	3.21	1.64	5.61	1.10	3.76	1.69	5.77	0.85	2.89
					24	75.2	1.63	5.55	1.15	3.94	1.85	6.31	1.28	4.35	1.90	6.49	1.05	3.57
					27	80.6	1.64	5.61	1.18	4.04	1.87	6.37	1.34	4.59	1.92	6.56	1.15	3.94
					31	87.8	1.66	5.66	1.23	4.19	1.89	6.43	1.40	4.76	1.94	6.63	1.26	4.31
	800	471	25	0.1	23	73.4	1.52	5.20	0.99	3.38	1.73	5.91	1.09	3.72	1.78	6.09	0.89	3.04
					24	75.2	1.54	5.25	1.09	3.73	1.75	5.97	1.15	3.94	1.80	6.15	0.99	3.38
					27	80.6	1.56	5.31	1.12	3.82	1.77	6.03	1.22	4.16	1.82	6.21	1.09	3.73
					31	87.8	1.57	5.36	1.16	3.97	1.78	6.09	1.27	4.32	1.84	6.27	1.19	4.08

GFH12K3CI

Fan speed	Air Flow Rate		ESP		Entering Air DBT		Outdoor Air Dry Bulb Temperature 95 ℉ (35℃)											
							Indoor Air Wet Bulb Temperature ℉ (℃)											
							62 ℉ (17℃)				67 ℉ (19℃)				72 ℉ (22℃)			
							Total Capacity		Sensible Capacity		Total Capacity		Sensible Capacity		Total Capacity		Sensible Capacity	
	m^3/h	cfm	Pa	in.wg	℃	℉	kW	KBtu/h	kW	KBtu/h	kW	KBtu/h	kW	KBtu/h	kW	KBtu/h	kW	KBtu/h
Hight Speed	1800	1059	0	0	23	73.4	3.04	10.36	2.28	7.77	3.45	11.77	2.41	8.24	3.55	12.12	1.92	6.55
					24	75.2	3.07	10.46	2.45	8.37	3.48	11.89	2.54	8.68	3.59	12.25	2.12	7.23
					27	80.6	3.10	10.57	2.51	8.56	3.52	12.01	2.68	9.13	3.63	12.37	2.36	8.04
					31	87.8	3.13	10.67	2.63	8.97	3.56	12.13	2.81	9.58	3.66	12.49	2.56	8.75
	1680	989	15	0.06	23	73.4	2.85	9.74	2.14	7.30	3.24	11.06	2.17	7.41	3.34	11.40	1.80	6.15
					24	75.2	2.88	9.84	2.31	7.87	3.28	11.18	2.26	7.71	3.37	11.51	1.99	6.79
					27	80.6	2.91	9.93	2.36	8.05	3.31	11.29	2.38	8.13	3.41	11.63	2.22	7.56
					31	87.8	2.94	10.03	2.47	8.43	3.34	11.40	2.47	8.44	3.44	11.74	2.41	8.22
	1600	942	25	0.1	23	73.4	2.61	8.91	1.96	6.68	2.97	10.12	1.87	6.38	3.06	10.43	1.65	5.63
					24	75.2	2.64	9.00	2.11	7.20	3.00	10.23	1.98	6.75	3.09	10.53	1.82	6.21
					27	80.6	2.66	9.09	2.16	7.36	3.03	10.33	2.09	7.13	3.12	10.64	2.03	6.92
					31	87.8	2.69	9.18	2.26	7.71	3.06	10.43	2.17	7.41	3.15	10.75	2.20	7.52
Mid Speed	1600	942	0	0	23	73.4	2.97	10.15	2.23	7.61	3.38	11.53	2.37	8.07	3.48	11.88	1.88	6.42
					24	75.2	3.01	10.25	2.40	8.20	3.42	11.65	2.49	8.51	3.52	12.00	2.08	7.08
					27	80.6	3.04	10.36	2.46	8.39	3.45	11.77	2.62	8.95	3.55	12.12	2.31	7.88
					31	87.8	3.07	10.46	2.58	8.79	3.48	11.89	2.75	9.39	3.59	12.24	2.51	8.57
	1480	871	15	0.06	23	73.4	2.80	9.54	2.10	7.16	3.18	10.84	2.13	7.26	3.27	11.17	1.77	6.03
					24	75.2	2.82	9.64	2.26	7.71	3.21	10.95	2.22	7.56	3.31	11.28	1.95	6.66
					27	80.6	2.85	9.74	2.31	7.89	3.24	11.06	2.33	7.97	3.34	11.40	2.17	7.41
					31	87.8	2.88	9.83	2.42	8.26	3.28	11.17	2.42	8.27	3.37	11.51	2.36	8.06
	1400	824	25	0.1	23	73.4	2.56	8.73	1.92	6.55	2.91	9.92	1.83	6.25	2.99	10.22	1.62	5.52
					24	75.2	2.58	8.82	2.07	7.05	2.94	10.02	1.94	6.61	3.03	10.32	1.78	6.09
					27	80.6	2.61	8.91	2.11	7.22	2.97	10.12	2.05	6.98	3.06	10.43	1.99	6.78
					31	87.8	2.64	9.00	2.21	7.56	3.00	10.22	2.13	7.26	3.09	10.53	2.16	7.37
Low Speed	1400	824	0	0	23	73.4	2.88	9.84	1.87	6.40	3.28	11.18	2.29	7.83	3.38	11.52	1.69	5.76
					24	75.2	2.91	9.94	2.07	7.06	3.31	11.30	2.42	8.25	3.41	11.63	1.88	6.40
					27	80.6	2.94	10.04	2.12	7.23	3.34	11.41	2.54	8.67	3.44	11.75	2.07	7.05
					31	87.8	2.97	10.14	2.20	7.50	3.38	11.52	2.67	9.10	3.48	11.87	2.26	7.72
	1280	753	15	0.06	23	73.4	2.71	9.25	1.76	6.01	3.08	10.51	2.06	7.04	3.17	10.83	1.59	5.41
					24	75.2	2.74	9.34	1.94	6.63	3.11	10.62	2.15	7.33	3.21	10.94	1.76	6.02
					27	80.6	2.77	9.44	1.99	6.80	3.14	10.73	2.26	7.72	3.24	11.05	1.94	6.63
					31	87.8	2.79	9.53	2.07	7.05	3.17	10.83	2.35	8.02	3.27	11.16	2.13	7.25
	1200	706	25	0.1	23	73.4	2.48	8.46	1.61	5.50	2.82	9.62	1.78	6.06	2.90	9.90	1.45	4.95
					24	75.2	2.51	8.55	1.78	6.07	2.85	9.71	1.88	6.41	2.93	10.01	1.61	5.50
					27	80.6	2.53	8.63	1.82	6.22	2.88	9.81	1.98	6.77	2.96	10.11	1.78	6.06
					31	87.8	2.56	8.72	1.89	6.45	2.90	9.91	2.06	7.04	2.99	10.21	1.94	6.64

Fan speed	Air Flow Rate		ESP		Entering Air DBT		Outdoor Air Dry Bulb Temperature 109 ℉ (43℃)											
							Indoor Air Wet Bulb Temperature ℉ (℃)											
							62 ℉ (17℃)				67 ℉ (19℃)				72 ℉ (22℃)			
							Total Capacity		Sensible Capacity		Total Capacity		Sensible Capacity		Total Capacity		Sensible Capacity	
	m^3/h	cfm	Pa	in.wg	℃	℉	kW	KBtu /h	kW	KBtu /h	kW	KBtu /h	kW	KBtu /h	kW	KBtu /h	kW	KBtu /h
Hight Speed	1800	1059	0	0	23	73.4	2.58	8.80	1.94	6.60	2.93	10.00	2.05	7.00	3.02	10.30	1.63	5.56
					24	75.2	2.61	8.89	2.09	7.12	2.96	10.11	2.16	7.38	3.05	10.41	1.80	6.14
					27	80.6	2.63	8.98	2.13	7.28	2.99	10.21	2.27	7.76	3.08	10.51	2.00	6.83
					31	87.8	2.66	9.07	2.23	7.62	3.02	10.31	2.39	8.15	3.11	10.62	2.18	7.43
	1680	989	15	0.06	23	73.4	2.18	7.44	1.64	5.58	2.48	8.46	1.66	5.66	2.55	8.71	1.38	4.70
					24	75.2	2.45	8.37	1.96	6.70	2.79	9.51	1.92	6.56	2.87	9.80	1.69	5.78
					27	80.6	2.48	8.46	2.01	6.85	2.82	9.61	2.03	6.92	2.90	9.90	1.89	6.43
					31	87.8	2.50	8.54	2.10	7.17	2.84	9.70	2.10	7.18	2.93	10.00	2.05	7.00
	1600	942	25	0.1	23	73.4	2.31	7.87	1.73	5.90	2.62	8.95	1.65	5.64	2.70	9.21	1.46	4.98
					24	75.2	2.33	7.95	1.86	6.36	2.65	9.04	1.75	5.96	2.73	9.31	1.61	5.49
					27	80.6	2.35	8.03	1.91	6.51	2.68	9.13	1.85	6.30	2.76	9.40	1.79	6.11
					31	87.8	2.38	8.11	2.00	6.81	2.70	9.22	1.92	6.55	2.78	9.50	1.95	6.65
Mid Speed	1600	942	0	0	23	73.4	2.53	8.63	1.90	6.47	2.87	9.80	2.01	6.86	2.96	10.10	1.60	5.45
					24	75.2	2.55	8.72	2.04	6.97	2.90	9.90	2.12	7.23	2.99	10.20	1.76	6.02
					27	80.6	2.58	8.80	2.09	7.13	2.93	10.00	2.23	7.60	3.02	10.30	1.96	6.70
					31	87.8	2.61	8.89	2.19	7.47	2.96	10.10	2.34	7.98	3.05	10.41	2.14	7.29
	1480	871	15	0.06	23	73.4	2.14	7.29	1.60	5.47	2.43	8.29	1.63	5.55	2.50	8.53	1.35	4.61
					24	75.2	2.40	8.20	1.92	6.56	2.73	9.32	1.89	6.43	2.81	9.60	1.66	5.66
					27	80.6	2.43	8.29	1.97	6.71	2.76	9.42	1.99	6.78	2.84	9.70	1.85	6.30
					31	87.8	2.45	8.37	2.06	7.03	2.79	9.51	2.06	7.04	2.87	9.80	2.01	6.86
	1400	824	25	0.1	23	73.4	2.26	7.71	1.70	5.79	2.57	8.77	1.62	5.52	2.65	9.03	1.43	4.88
					24	75.2	2.28	7.79	1.83	6.23	2.60	8.86	1.71	5.84	2.67	9.12	1.58	5.38
					27	80.6	2.31	7.87	1.87	6.38	2.62	8.95	1.81	6.17	2.70	9.21	1.76	5.99
					31	87.8	2.33	7.95	1.96	6.68	2.65	9.03	1.88	6.41	2.73	9.31	1.91	6.51
Low Speed	1400	824	0	0	23	73.4	2.45	8.36	1.59	5.44	2.79	9.50	1.95	6.65	2.87	9.79	1.43	4.89
					24	75.2	2.48	8.45	1.76	6.00	2.81	9.60	2.05	7.01	2.90	9.89	1.59	5.44
					27	80.6	2.50	8.53	1.80	6.14	2.84	9.70	2.16	7.37	2.93	9.99	1.76	5.99
					31	87.8	2.53	8.62	1.87	6.38	2.87	9.80	2.27	7.74	2.96	10.09	1.92	6.56
	1280	753	15	0.06	23	73.4	2.07	7.07	1.35	4.59	2.35	8.03	1.58	5.38	2.42	8.27	1.21	4.14
					24	75.2	2.33	7.95	1.65	5.65	2.65	9.04	1.83	6.24	2.73	9.31	1.50	5.12
					27	80.6	2.35	8.03	1.70	5.78	2.68	9.13	1.93	6.57	2.76	9.40	1.65	5.64
					31	87.8	2.38	8.11	1.76	6.00	2.70	9.22	2.00	6.82	2.78	9.50	1.81	6.17
	1200	706	25	0.1	23	73.4	2.19	7.48	1.42	4.86	2.49	8.50	1.57	5.35	2.57	8.75	1.28	4.38
					24	75.2	2.21	7.55	1.57	5.36	2.52	8.58	1.66	5.67	2.59	8.84	1.43	4.86
					27	80.6	2.24	7.63	1.61	5.49	2.54	8.67	1.75	5.98	2.62	8.93	1.57	5.36
					31	87.8	2.26	7.71	1.67	5.70	2.57	8.76	1.82	6.22	2.64	9.02	1.72	5.86

Fan speed	Air Flow Rate		ESP		Entering Air DBT		Outdoor Air Dry Bulb Temperature 118 ℉ (48℃)											
							Indoor Air Wet Bulb Temperature ℉ (℃)											
							62 ℉ (17℃)				67 ℉ (19℃)				72 ℉ (22℃)			
							Total Capacity		Sensible Capacity		Total Capacity		Sensible Capacity		Total Capacity		Sensible Capacity	
	m^3/h	cfm	Pa	in.wg	℃	℉	kW	KBtu /h	kW	KBtu /h	kW	KBtu /h	kW	KBtu /h	kW	KBtu /h	kW	KBtu /h
Hight Speed	1800	1059	0	0	23	73.4	2.52	8.60	1.89	6.45	2.86	9.77	2.00	6.84	2.95	10.06	1.59	5.43
					24	75.2	2.55	8.68	2.04	6.95	2.89	9.87	2.11	7.20	2.98	10.16	1.76	6.00
					27	80.6	2.57	8.77	2.08	7.11	2.92	9.97	2.22	7.58	3.01	10.27	1.96	6.67
					31	87.8	2.60	8.86	2.18	7.44	2.95	10.07	2.33	7.95	3.04	10.37	2.13	7.26
	1680	989	15	0.06	23	73.4	2.04	6.98	1.53	5.23	2.32	7.93	1.56	5.31	2.39	8.16	1.29	4.41
					24	75.2	2.30	7.85	1.84	6.28	2.61	8.92	1.80	6.15	2.69	9.19	1.59	5.42
					27	80.6	2.32	7.93	1.88	6.42	2.64	9.01	1.90	6.49	2.72	9.28	1.77	6.03
					31	87.8	2.35	8.01	1.97	6.73	2.67	9.10	1.97	6.73	2.75	9.37	1.92	6.56
	1600	942	25	0.1	23	73.4	2.16	7.35	1.62	5.52	2.45	8.36	1.54	5.26	2.52	8.61	1.36	4.65
					24	75.2	2.18	7.43	1.74	5.94	2.47	8.44	1.63	5.57	2.55	8.70	1.50	5.13
					27	80.6	2.20	7.50	1.78	6.08	2.50	8.53	1.72	5.88	2.57	8.78	1.67	5.71
					31	87.8	2.22	7.58	1.87	6.37	2.52	8.61	1.79	6.11	2.60	8.87	1.82	6.21
Mid Speed	1600	942	0	0	23	73.4	2.47	8.42	1.85	6.32	2.81	9.57	1.96	6.70	2.89	9.86	1.56	5.32
					24	75.2	2.49	8.51	2.00	6.81	2.83	9.67	2.07	7.06	2.92	9.96	1.72	5.88
					27	80.6	2.52	8.60	2.04	6.96	2.86	9.77	2.18	7.42	2.95	10.06	1.92	6.54
					31	87.8	2.54	8.68	2.14	7.29	2.89	9.87	2.28	7.79	2.98	10.16	2.08	7.11
	1480	871	15	0.06	23	73.4	2.00	6.84	1.50	5.13	2.28	7.77	1.53	5.20	2.35	8.00	1.27	4.32
					24	75.2	2.25	7.69	1.80	6.15	2.56	8.74	1.77	6.03	2.64	9.00	1.56	5.31
					27	80.6	2.28	7.77	1.84	6.29	2.59	8.83	1.86	6.36	2.66	9.09	1.73	5.91
					31	87.8	2.30	7.85	1.93	6.59	2.61	8.92	1.93	6.60	2.69	9.18	1.88	6.43
	1400	824	25	0.1	23	73.4	2.11	7.21	1.58	5.41	2.40	8.19	1.51	5.16	2.47	8.44	1.34	4.56
					24	75.2	2.13	7.28	1.71	5.82	2.42	8.27	1.60	5.46	2.50	8.52	1.47	5.03
					27	80.6	2.16	7.35	1.75	5.96	2.45	8.36	1.69	5.77	2.52	8.61	1.64	5.59
					31	87.8	2.18	7.43	1.83	6.24	2.47	8.44	1.76	5.99	2.55	8.69	1.78	6.09
Low Speed	1400	824	0	0	23	73.4	2.39	8.17	1.56	5.31	2.72	9.28	1.90	6.50	2.80	9.56	1.40	4.78
					24	75.2	2.42	8.25	1.72	5.86	2.75	9.38	2.01	6.84	2.83	9.66	1.56	5.31
					27	80.6	2.44	8.33	1.76	6.00	2.78	9.47	2.11	7.20	2.86	9.75	1.72	5.85
					31	87.8	2.47	8.42	1.83	6.23	2.80	9.56	2.21	7.56	2.89	9.85	1.88	6.40
	1280	753	15	0.06	23	73.4	1.94	6.63	1.26	4.31	2.21	7.53	1.48	5.05	2.27	7.76	1.14	3.88
					24	75.2	2.18	7.46	1.55	5.29	2.48	8.47	1.71	5.85	2.56	8.73	1.41	4.80
					27	80.6	2.21	7.53	1.59	5.42	2.51	8.56	1.81	6.16	2.58	8.81	1.55	5.29
					31	87.8	2.23	7.61	1.65	5.63			1.87	6.40	2.61	8.90	1.70	5.79
	1200	706	25	0.1	23	73.4	2.05	6.99	1.33	4.54	2.33	7.94	1.47	5.00	2.40	8.18	1.20	4.09
					24	75.2	2.07	7.06	1.47	5.01	2.35	8.02	1.55	5.29	2.42	8.26	1.33	4.54
					27	80.6	2.09	7.13	1.50	5.13	2.37	8.10	1.64	5.59	2.45	8.34	1.47	5.01
					31	87.8	2.11	7.20	1.56	5.33	2.40	8.18	1.70	5.81	2.47	8.43	1.61	5.48

GFH18K3CI

Fan speed	Air Flow Rate		ESP		Entering Air DBT		Outdoor Air Dry Bulb Temperature 95 ℉ (35℃)											
							Indoor Air Wet Bulb Temperature ℉ (℃)											
							62 ℉ (17℃)				67 ℉ (19℃)				72 ℉ (22℃)			
							Total Capacity		Sensible Capacity		Total Capacity		Sensible Capacity		Total Capacity		Sensible Capacity	
	m^3/h	cfm	Pa	in.wg	℃	℉	kW	KBtu /h	kW	KBtu /h	kW	KBtu /h	kW	KBtu /h	kW	KBtu /h	kW	KBtu /h
Hight Speed	1250	736	0	0	23	73.4	4.58	15.62	3.43	11.72	5.20	17.76	3.64	12.43	5.36	18.29	2.89	9.88
					24	75.2	4.63	15.78	3.70	12.63	5.26	17.94	3.84	13.09	5.41	18.47	3.19	10.90
					27	80.6	4.67	15.94	3.78	12.91	5.31	18.12	4.04	13.77	5.47	18.66	3.56	12.13
					31	87.8	4.72	16.10	3.96	13.53	5.36	18.30	4.24	14.46	5.52	18.85	3.87	13.19
	1100	647	15	0.06	23	73.4	4.30	14.69	3.23	11.02	4.89	16.69	3.28	11.18	5.04	17.19	2.72	9.28
					24	75.2	4.35	14.84	3.48	11.87	4.94	16.86	3.41	11.63	5.09	17.37	3.00	10.25
					27	80.6	4.39	14.99	3.56	12.14	4.99	17.03	3.59	12.26	5.14	17.54	3.34	11.40
					31	87.8	4.44	15.14	3.73	12.71	5.04	17.20	3.73	12.73	5.19	17.72	3.63	12.40
	1000	589	25	0.1	23	73.4	3.94	13.44	2.95	10.08	4.48	15.27	2.82	9.62	4.61	15.73	2.49	8.49
					24	75.2	3.98	13.57	3.18	10.86	4.52	15.43	2.98	10.18	4.66	15.89	2.75	9.37
					27	80.6	4.02	13.71	3.26	11.11	4.57	15.58	3.15	10.75	4.70	16.05	3.06	10.43
					31	87.8	4.06	13.85	3.41	11.63	4.61	15.74	3.27	11.17	4.75	16.21	3.33	11.35
Mid Speed	1100	647	0	0	23	73.4	4.49	15.31	3.37	11.48	5.10	17.40	3.57	12.18	5.25	17.92	2.84	9.68
					24	75.2	4.53	15.47	3.63	12.37	5.15	17.58	3.76	12.83	5.31	18.11	3.13	10.68
					27	80.6	4.58	15.62	3.71	12.66	5.20	17.76	3.95	13.49	5.36	18.29	3.48	11.89
					31	87.8	4.63	15.78	3.89	13.26	5.26	17.93	4.15	14.17	5.41	18.47	3.79	12.93
	1000	589	15	0.06	23	73.4	4.22	14.39	3.16	10.80	4.79	16.36	3.21	10.96	4.94	16.85	2.67	9.10
					24	75.2	4.26	14.54	3.41	11.63	4.84	16.52	3.34	11.40	4.99	17.02	2.94	10.04
					27	80.6	4.30	14.69	3.49	11.90	4.89	16.69	3.52	12.02	5.04	17.19	3.27	11.17
					31	87.8	4.35	14.83	3.65	12.46	4.94	16.86	3.66	12.47	5.09	17.36	3.56	12.15
	900	530	25	0.1	23	73.4	3.86	13.17	2.89	9.88	4.39	14.96	2.76	9.43	4.52	15.41	2.44	8.32
					24	75.2	3.90	13.30	3.12	10.64	4.43	15.12	2.92	9.98	4.56	15.57	2.69	9.19
					27	80.6	3.94	13.44	3.19	10.88	4.48	15.27	3.09	10.54	4.61	15.73	3.00	10.22
					31	87.8	3.98	13.57	3.34	11.40	4.52	15.42	3.21	10.95	4.66	15.88	3.26	11.12
Low Speed	1000	589	0	0	23	73.4	4.35	14.84	2.83	9.65	4.94	16.87	3.46	11.81	5.09	17.37	2.55	8.69
					24	75.2	4.39	14.99	3.12	10.65	4.99	17.04	3.65	12.44	5.14	17.55	2.83	9.65
					27	80.6	4.44	15.15	3.20	10.91	5.04	17.21	3.83	13.08	5.20	17.73	3.12	10.64
					31	87.8	4.48	15.30	3.32	11.32	5.09	17.38	4.03	13.73	5.25	17.91	3.41	11.64
	880	518	15	0.06	23	73.4	4.09	13.95	2.66	9.07	4.65	15.86	3.11	10.62	4.79	16.33	2.39	8.17
					24	75.2	4.13	14.10	2.93	10.01	4.69	16.02	3.24	11.05	4.84	16.50	2.66	9.07
					27	80.6	4.17	14.24	3.00	10.25	4.74	16.18	3.41	11.65	4.88	16.66	2.93	10.00
					31	87.8	4.21	14.38	3.12	10.64	4.79	16.34	3.54	12.09	4.93	16.83	3.21	10.94
	800	471	25	0.1	23	73.4	3.74	12.77	2.43	8.30	4.25	14.51	2.68	9.14	4.38	14.94	2.19	7.47
					24	75.2	3.78	12.90	2.68	9.16	4.29	14.65	2.83	9.67	4.42	15.09	2.43	8.30
					27	80.6	3.82	13.03	2.75	9.38	4.34	14.80	2.99	10.21	4.47	15.25	2.68	9.15
					31	87.8	3.86	13.16	2.85	9.74	4.38	14.95	3.11	10.61	4.51	15.40	2.93	10.01

Fan speed	Air Flow Rate		ESP		Entering Air DBT		Outdoor Air Dry Bulb Temperature 109 ℉ (43℃)											
							Indoor Air Wet Bulb Temperature ℉ (℃)											
							62 ℉ (17℃)				67 ℉ (19℃)				72 ℉ (22℃)			
							Total Capacity		Sensible Capacity		Total Capacity		Sensible Capacity		Total Capacity		Sensible Capacity	
	m^3/h	cfm	Pa	in.wg	℃	℉	kW	KBtu /h	kW	KBtu /h	kW	KBtu /h	kW	KBtu /h	kW	KBtu /h	kW	KBtu /h
Hight Speed	1250	736	0	0	23	73.4	3.89	13.28	2.92	9.96	4.42	15.09	3.10	10.56	4.56	15.54	2.46	8.39
					24	75.2	3.93	13.42	3.15	10.73	4.47	15.25	3.26	11.13	4.60	15.70	2.72	9.27
					27	80.6	3.97	13.55	3.22	10.98	4.51	15.40	3.43	11.70	4.65	15.86	3.02	10.31
					31	87.8	4.01	13.69	3.37	11.50	4.56	15.55	3.60	12.29	4.70	16.02	3.29	11.21
	1100	647	15	0.06	23	73.4	3.29	11.22	2.47	8.42	3.74	12.75	2.50	8.55	3.85	13.14	2.08	7.09
					24	75.2	3.70	12.63	2.96	10.10	4.21	14.35	2.90	9.90	4.33	14.78	2.56	8.72
					27	80.6	3.74	12.75	3.03	10.33	4.25	14.49	3.06	10.44	4.38	14.93	2.84	9.70
					31	87.8	3.78	12.88	3.17	10.82	4.29	14.64	3.17	10.83	4.42	15.08	3.09	10.55
	1000	589	25	0.1	23	73.4	3.48	11.87	2.61	8.91	3.95	13.49	2.49	8.50	4.07	13.90	2.20	7.51
					24	75.2	3.52	12.00	2.81	9.60	4.00	13.63	2.64	9.00	4.12	14.04	2.43	8.28
					27	80.6	3.55	12.12	2.88	9.81	4.04	13.77	2.78	9.50	4.16	14.18	2.70	9.22
					31	87.8	3.59	12.24	3.01	10.28	4.08	13.91	2.89	9.87	4.20	14.32	2.94	10.03
Mid Speed	1100	647	0	0	23	73.4	3.81	13.02	2.86	9.76	4.33	14.79	3.03	10.35	4.46	15.23	2.41	8.23
					24	75.2	3.85	13.15	3.08	10.52	4.38	14.94	3.20	10.91	4.51	15.39	2.66	9.08
					27	80.6	3.89	13.28	3.15	10.76	4.42	15.09	3.36	11.47	4.56	15.54	2.96	10.10
					31	87.8	3.93	13.41	3.30	11.27	4.47	15.24	3.53	12.04	4.60	15.70	3.22	10.99
	1000	589	15	0.06	23	73.4	3.22	11.00	2.42	8.25	3.66	12.50	2.45	8.37	3.77	12.87	2.04	6.95
					24	75.2	3.63	12.37	2.90	9.90	4.12	14.06	2.84	9.70	4.25	14.48	2.50	8.55
					27	80.6	3.66	12.50	2.97	10.12	4.16	14.20	3.00	10.23	4.29	14.63	2.79	9.51
					31	87.8	3.70	12.62	3.11	10.60	4.20	14.35	3.11	10.62	4.33	14.78	3.03	10.34
	900	530	25	0.1	23	73.4	3.41	11.64	2.56	8.73	3.88	13.22	2.44	8.33	3.99	13.62	2.16	7.36
					24	75.2	3.45	11.76	2.76	9.40	3.92	13.36	2.58	8.82	4.03	13.76	2.38	8.12
					27	80.6	3.48	11.87	2.82	9.62	3.95	13.49	2.73	9.31	4.07	13.90	2.65	9.03
					31	87.8	3.52	11.99	2.95	10.07	3.99	13.63	2.84	9.68	4.11	14.04	2.88	9.83
Low Speed	1000	589	0	0	23	73.4	3.70	12.62	2.40	8.20	4.20	14.34	2.94	10.04	4.33	14.77	2.16	7.38
					24	75.2	3.74	12.75	2.65	9.05	4.24	14.48	3.10	10.57	4.37	14.92	2.40	8.21
					27	80.6	3.77	12.87	2.72	9.27	4.29	14.63	3.26	11.12	4.42	15.07	2.65	9.04
					31	87.8	3.81	13.00	2.82	9.62	4.33	14.78	3.42	11.67	4.46	15.22	2.90	9.89
	880	518	15	0.06	23	73.4	3.13	10.66	2.03	6.93	3.55	12.12	2.38	8.12	3.66	12.48	1.83	6.24
					24	75.2	3.52	12.00	2.50	8.52	4.00	13.63	2.76	9.41	4.12	14.04	2.26	7.72
					27	80.6	3.55	12.12	2.56	8.72	4.04	13.77	2.91	9.91	4.16	14.18	2.49	8.51
					31	87.8	3.59	12.24	2.65	9.06	4.08	13.91	3.02	10.29	4.20	14.32	2.73	9.31
	800	471	25	0.1	23	73.4	3.31	11.28	2.15	7.33	3.76	12.82	2.37	8.08	3.87	13.20	1.93	6.60
					24	75.2	3.34	11.40	2.37	8.09	3.80	12.95	2.51	8.55	3.91	13.34	2.15	7.34
					27	80.6	3.37	11.51	2.43	8.29	3.83	13.08	2.65	9.03	3.95	13.47	2.37	8.08
					31	87.8	3.41	11.63	2.52	8.60	3.87	13.21	2.75	9.38	3.99	13.61	2.59	8.85

Fan speed	Air Flow Rate		ESP		Entering Air DBT		Outdoor Air Dry Bulb Temperature 118 ℉ (48℃)											
							Indoor Air Wet Bulb Temperature ℉ (℃)											
							62 ℉ (17℃)				67 ℉ (19℃)				72 ℉ (22℃)			
							Total Capacity		Sensible Capacity		Total Capacity		Sensible Capacity		Total Capacity		Sensible Capacity	
	m^3/h	cfm	Pa	in.wg	℃	℉	kW	KBtu /h	kW	KBtu /h	kW	KBtu /h	kW	KBtu /h	kW	KBtu /h	kW	KBtu /h
Hight Speed	1250	736	0	0	23	73.4	3.80	12.97	2.85	9.73	4.32	14.74	3.02	10.32	4.45	15.18	2.40	8.20
					24	75.2	3.84	13.10	3.07	10.48	4.36	14.89	3.19	10.87	4.49	15.33	2.65	9.05
					27	80.6	3.88	13.23	3.14	10.72	4.41	15.04	3.35	11.43	4.54	15.49	2.95	10.07
					31	87.8	3.92	13.37	3.29	11.23	4.45	15.19	3.52	12.00	4.58	15.64	3.21	10.95
	1100	647	15	0.06	23	73.4	3.08	10.52	2.31	7.89	3.50	11.96	2.35	8.01	3.61	12.32	1.95	6.65
					24	75.2	3.47	11.84	2.78	9.47	3.94	13.45	2.72	9.28	4.06	13.86	2.40	8.18
					27	80.6	3.50	11.96	2.84	9.69	3.98	13.59	2.87	9.78	4.10	14.00	2.67	9.10
					31	87.8	3.54	12.08	2.97	10.14	4.02	13.72	2.98	10.16	4.14	14.14	2.90	9.90
	1000	589	25	0.1	23	73.4	3.25	11.09	2.44	8.32	3.69	12.61	2.33	7.94	3.81	12.98	2.05	7.01
					24	75.2	3.28	11.21	2.63	8.97	3.73	12.73	2.46	8.41	3.84	13.12	2.27	7.74
					27	80.6	3.32	11.32	2.69	9.17	3.77	12.86	2.60	8.88	3.88	13.25	2.52	8.61
					31	87.8	3.35	11.43	2.81	9.60	3.81	12.99	2.70	9.22	3.92	13.38	2.75	9.37
Mid Speed	1100	647	0	0	23	73.4	3.72	12.71	2.79	9.53	4.23	14.44	2.96	10.11	4.36	14.88	2.35	8.03
					24	75.2	3.76	12.84	3.01	10.27	4.28	14.59	3.12	10.65	4.40	15.03	2.60	8.87
					27	80.6	3.80	12.97	3.08	10.50	4.32	14.74	3.28	11.20	4.45	15.18	2.89	9.87
					31	87.8	3.84	13.10	3.22	11.00	4.36	14.88	3.45	11.76	4.49	15.33	3.15	10.73
	1000	589	15	0.06	23	73.4	3.02	10.31	2.27	7.73	3.43	11.72	2.30	7.85	3.54	12.07	1.91	6.52
					24	75.2	3.40	11.60	2.72	9.28	3.86	13.18	2.67	9.10	3.98	13.58	2.35	8.01
					27	80.6	3.43	11.72	2.78	9.49	3.90	13.32	2.81	9.59	4.02	13.72	2.61	8.92
					31	87.8	3.47	11.84	2.91	9.94	3.94	13.45	2.92	9.95	4.06	13.85	2.84	9.70
	900	530	25	0.1	23	73.4	3.19	10.87	2.39	8.15	3.62	12.35	2.28	7.78	3.73	12.72	2.01	6.87
					24	75.2	3.22	10.98	2.58	8.79	3.66	12.48	2.41	8.24	3.77	12.85	2.22	7.58
					27	80.6	3.25	11.09	2.63	8.99	3.69	12.61	2.55	8.70	3.81	12.98	2.47	8.44
					31	87.8	3.28	11.20	2.76	9.41	3.73	12.73	2.65	9.04	3.84	13.11	2.69	9.18
Low Speed	1000	589	0	0	23	73.4	3.61	12.32	2.35	8.01	4.10	14.00	2.87	9.80	4.23	14.42	2.11	7.21
					24	75.2	3.65	12.45	2.59	8.84	4.15	14.14	3.03	10.32	4.27	14.57	2.35	8.01
					27	80.6	3.68	12.57	2.65	9.05	4.19	14.29	3.18	10.86	4.31	14.71	2.59	8.83
					31	87.8	3.72	12.70	2.75	9.40	4.23	14.43	3.34	11.40	4.36	14.86	2.83	9.66
	880	518	15	0.06	23	73.4	2.93	10.00	1.90	6.50	3.33	11.36	2.23	7.61	3.43	11.70	1.71	5.85
					24	75.2	3.30	11.25	2.34	7.98	3.75	12.78	2.58	8.82	3.86	13.16	2.12	7.24
					27	80.6	3.33	11.36	2.40	8.18	3.78	12.91	2.72	9.29	3.90	13.30	2.34	7.98
					31	87.8	3.36	11.47	2.49	8.49	3.82	13.04	2.83	9.65	3.94	13.43	2.56	8.73
	800	471	25	0.1	23	73.4	3.09	10.54	2.01	6.85	3.51	11.98	2.21	7.54	3.62	12.34	1.81	6.17
					24	75.2	3.12	10.65	2.22	7.56	3.55	12.10	2.34	7.98	3.65	12.46	2.01	6.85
					27	80.6	3.15	10.75	2.27	7.74	3.58	12.22	2.47	8.43	3.69	12.59	2.21	7.55
					31	87.8	3.18	10.86	2.36	8.04	3.62	12.34	2.57	8.76	3.73	12.71	2.42	8.26

GFH24K3CI

Fan speed	Air Flow Rate		ESP		Entering Air DBT		Outdoor Air Dry Bulb Temperature 95 ℉ (35℃)											
							Indoor Air Wet Bulb Temperature ℉ (℃)											
							62 ℉ (17℃)				67 ℉ (19℃)				72 ℉ (22℃)			
							Total Capacity		Sensible Capacity		Total Capacity		Sensible Capacity		Total Capacity		Sensible Capacity	
	m^3/h	cfm	Pa	in.wg	℃	℉	kW	KBtu /h	kW	KBtu /h	kW	KBtu /h	kW	KBtu /h	kW	KBtu /h	kW	KBtu /h
Hight Speed	1800	1059	0	0	23	73.4	6.05	20.63	4.53	15.47	6.87	23.44	4.81	16.41	7.08	24.14	3.82	13.04
					24	75.2	6.11	20.84	4.89	16.67	6.94	23.68	5.07	17.29	7.15	24.39	4.22	14.39
					27	80.6	6.17	21.05	5.00	17.05	7.01	23.92	5.33	18.18	7.22	24.64	4.69	16.01
					31	87.8	6.23	21.26	5.23	17.86	7.08	24.16	5.59	19.08	7.29	24.88	5.10	17.42
	1680	989	15	0.06	23	73.4	5.68	19.39	4.26	14.54	6.46	22.03	4.33	14.76	6.65	22.69	3.59	12.25
					24	75.2	5.74	19.59	4.59	15.67	6.52	22.26	4.50	15.36	6.72	22.93	3.96	13.53
					27	80.6	5.80	19.79	4.70	16.03	6.59	22.48	4.74	16.19	6.79	23.16	4.41	15.05
					31	87.8	5.86	19.98	4.92	16.79	6.66	22.71	4.92	16.80	6.85	23.39	4.80	16.37
	1600	942	25	0.1	23	73.4	5.20	17.74	3.90	13.30	5.91	20.16	3.72	12.70	6.09	20.76	3.29	11.21
					24	75.2	5.25	17.92	4.20	14.34	5.97	20.36	3.94	13.44	6.15	20.97	3.63	12.38
					27	80.6	5.31	18.10	4.30	14.66	6.03	20.57	4.16	14.19	6.21	21.19	4.04	13.77
					31	87.8	5.36	18.28	4.50	15.36	6.09	20.78	4.32	14.75	6.27	21.40	4.39	14.98
Mid Speed	1600	942	0	0	23	73.4	5.92	20.21	4.44	15.16	6.73	22.97	4.71	16.08	6.93	23.66	3.74	12.78
					24	75.2	5.98	20.42	4.79	16.34	6.80	23.21	4.96	16.94	7.01	23.90	4.13	14.10
					27	80.6	6.05	20.63	4.90	16.71	6.87	23.44	5.22	17.81	7.08	24.14	4.60	15.69
					31	87.8	6.11	20.83	5.13	17.50	6.94	23.67	5.48	18.70	7.15	24.38	5.00	17.07
	1480	871	15	0.06	23	73.4	5.57	19.00	4.18	14.25	6.33	21.59	4.24	14.47	6.52	22.24	3.52	12.01
					24	75.2	5.63	19.20	4.50	15.36	6.39	21.81	4.41	15.05	6.58	22.47	3.89	13.26
					27	80.6	5.68	19.39	4.60	15.71	6.46	22.03	4.65	15.86	6.65	22.69	4.32	14.75
					31	87.8	5.74	19.58	4.82	16.45	6.52	22.25	4.83	16.47	6.72	22.92	4.70	16.04
	1400	824	25	0.1	23	73.4	5.10	17.38	3.82	13.04	5.79	19.76	3.65	12.45	5.96	20.35	3.22	10.99
					24	75.2	5.15	17.56	4.12	14.05	5.85	19.96	3.86	13.17	6.02	20.56	3.55	12.13
					27	80.6	5.20	17.74	4.21	14.37	5.91	20.16	4.08	13.91	6.09	20.76	3.96	13.50
					31	87.8	5.25	17.92	4.41	15.05	5.97	20.36	4.24	14.46	6.15	20.97	4.30	14.68
Low Speed	1400	824	0	0	23	73.4	5.74	19.60	3.73	12.74	6.53	22.27	4.57	15.59	6.72	22.94	3.36	11.47
					24	75.2	5.80	19.80	4.12	14.05	6.59	22.49	4.81	16.42	6.79	23.17	3.73	12.74
					27	80.6	5.86	20.00	4.22	14.40	6.66	22.72	5.06	17.27	6.86	23.40	4.12	14.04
					31	87.8	5.92	20.20	4.38	14.94	6.73	22.95	5.31	18.13	6.93	23.64	4.50	15.36
	1280	753	15	0.06	23	73.4	5.40	18.42	3.51	11.97	6.13	20.93	4.11	14.02	6.32	21.56	3.16	10.78
					24	75.2	5.45	18.61	3.87	13.21	6.20	21.15	4.28	14.59	6.38	21.78	3.51	11.98
					27	80.6	5.51	18.80	3.97	13.53	6.26	21.36	4.51	15.38	6.45	22.00	3.87	13.20
					31	87.8	5.56	18.98	4.12	14.05	6.32	21.57	4.68	15.96	6.51	22.22	4.23	14.44
	1200	706	25	0.1	23	73.4	4.94	16.85	3.21	10.95	5.61	19.15	3.54	12.06	5.78	19.72	2.89	9.86
					24	75.2	4.99	17.02	3.54	12.09	5.67	19.35	3.74	12.77	5.84	19.93	3.21	10.96
					27	80.6	5.04	17.20	3.63	12.38	5.73	19.54	3.95	13.48	5.90	20.13	3.54	12.08
					31	87.8	5.09	17.37	3.77	12.85	5.78	19.74	4.11	14.01	5.96	20.33	3.87	13.21

Fan speed	Air Flow Rate		ESP		Entering Air DBT		Outdoor Air Dry Bulb Temperature 109 ℉ (43℃)											
							Indoor Air Wet Bulb Temperature ℉ (℃)											
							62 ℉ (17℃)				67 ℉ (19℃)				72 ℉ (22℃)			
							Total Capacity		Sensible Capacity		Total Capacity		Sensible Capacity		Total Capacity		Sensible Capacity	
	m^3/h	cfm	Pa	in.wg	℃	℉	kW	KBtu /h	kW	KBtu /h	kW	KBtu /h	kW	KBtu /h	kW	KBtu /h	kW	KBtu /h
Hight Speed	1800	1059	0	0	23	73.4	5.14	17.53	3.85	13.15	5.84	19.92	4.09	13.95	6.01	20.52	3.25	11.08
					24	75.2	5.19	17.71	4.15	14.17	5.90	20.13	4.31	14.69	6.08	20.73	3.58	12.23
					27	80.6	5.24	17.89	4.25	14.49	5.96	20.33	4.53	15.45	6.14	20.94	3.99	13.61
					31	87.8	5.30	18.07	4.45	15.18	6.02	20.53	4.75	16.22	6.20	21.15	4.34	14.80
	1680	989	15	0.06	23	73.4	4.34	14.82	3.26	11.11	4.94	16.84	3.31	11.28	5.08	17.34	2.74	9.37
					24	75.2	4.89	16.67	3.91	13.34	5.55	18.94	3.83	13.07	5.72	19.51	3.37	11.51
					27	80.6	4.94	16.84	4.00	13.64	5.61	19.13	4.04	13.78	5.78	19.71	3.75	12.81
					31	87.8	4.98	17.01	4.19	14.29	5.66	19.33	4.19	14.30	5.83	19.91	4.08	13.93
	1600	942	25	0.1	23	73.4	4.59	15.68	3.45	11.76	5.22	17.81	3.29	11.22	5.38	18.35	2.90	9.91
					24	75.2	4.64	15.84	3.71	12.67	5.27	18.00	3.48	11.88	5.43	18.54	3.21	10.94
					27	80.6	4.69	16.00	3.80	12.96	5.33	18.18	3.68	12.54	5.49	18.72	3.57	12.17
					31	87.8	4.74	16.16	3.98	13.57	5.38	18.36	3.82	13.04	5.54	18.91	3.88	13.24
Mid Speed	1600	942	0	0	23	73.4	5.04	17.18	3.78	12.89	5.72	19.53	4.01	13.67	5.89	20.11	3.18	10.86
					24	75.2	5.09	17.36	4.07	13.89	5.78	19.72	4.22	14.40	5.95	20.32	3.51	11.99
					27	80.6	5.14	17.53	4.16	14.20	5.84	19.92	4.44	15.14	6.01	20.52	3.91	13.34
					31	87.8	5.19	17.71	4.36	14.87	5.90	20.12	4.66	15.90	6.07	20.73	4.25	14.51
	1480	871	15	0.06	23	73.4	4.26	14.52	3.19	10.89	4.84	16.50	3.24	11.06	4.98	17.00	2.69	9.18
					24	75.2	4.79	16.34	3.83	13.07	5.44	18.56	3.75	12.81	5.60	19.12	3.31	11.28
					27	80.6	4.84	16.50	3.92	13.37	5.50	18.75	3.96	13.50	5.66	19.31	3.68	12.55
					31	87.8	4.88	16.67	4.10	14.00	5.55	18.94	4.11	14.02	5.72	19.51	4.00	13.66
	1400	824	25	0.1	23	73.4	4.50	15.36	3.38	11.52	5.12	17.46	3.22	11.00	5.27	17.98	2.85	9.71
					24	75.2	4.55	15.52	3.64	12.42	5.17	17.64	3.41	11.64	5.32	18.17	3.14	10.72
					27	80.6	4.59	15.68	3.72	12.70	5.22	17.81	3.60	12.29	5.38	18.35	3.50	11.93
					31	87.8	4.64	15.83	3.90	13.30	5.27	17.99	3.74	12.77	5.43	18.53	3.80	12.97
Low Speed	1400	824	0	0	23	73.4	4.88	16.66	3.17	10.83	5.55	18.93	3.88	13.25	5.71	19.50	2.86	9.75
					24	75.2	4.93	16.83	3.50	11.95	5.60	19.12	4.09	13.96	5.77	19.69	3.17	10.83
					27	80.6	4.98	17.00	3.59	12.24	5.66	19.31	4.30	14.68	5.83	19.89	3.50	11.94
					31	87.8	5.03	17.17	3.72	12.70	5.72	19.51	4.52	15.41	5.89	20.09	3.83	13.06
	1280	753	15	0.06	23	73.4	4.13	14.08	2.68	9.15	4.69	16.00	3.14	10.72	4.83	16.48	2.41	8.24
					24	75.2	4.64	15.84	3.30	11.24	5.27	18.00	3.64	12.42	5.43	18.54	2.99	10.19
					27	80.6	4.69	16.00	3.38	11.52	5.33	18.18	3.84	13.09	5.49	18.72	3.29	11.23
					31	87.8	4.74	16.16	3.50	11.96	5.38	18.36	3.98	13.59	5.54	18.91	3.60	12.29
	1200	706	25	0.1	23	73.4	4.36	14.89	2.84	9.68	4.96	16.92	3.12	10.66	5.11	17.43	2.55	8.72
					24	75.2	4.41	15.04	3.13	10.68	5.01	17.10	3.31	11.28	5.16	17.61	2.84	9.68
					27	80.6	4.45	15.20	3.21	10.94	5.06	17.27	3.49	11.92	5.21	17.79	3.13	10.67
					31	87.8	4.50	15.35	3.33	11.36	5.11	17.44	3.63	12.38	5.27	17.96	3.42	11.68

Fan speed	Air Flow Rate		ESP		Entering Air DBT		Outdoor Air Dry Bulb Temperature 118 ℉ (48℃)											
							Indoor Air Wet Bulb Temperature ℉ (℃)											
							62 ℉ (17℃)				67 ℉ (19℃)				72 ℉ (22℃)			
							Total Capacity		Sensible Capacity		Total Capacity		Sensible Capacity		Total Capacity		Sensible Capacity	
	m^3/h	cfm	Pa	in.wg	℃	℉	kW	KBtu /h	kW	KBtu /h	kW	KBtu /h	kW	KBtu /h	kW	KBtu /h	kW	KBtu /h
Hight Speed	1800	1059	0	0	23	73.4	5.02	17.12	3.76	12.84	5.70	19.45	3.99	13.62	5.87	20.04	3.17	10.82
					24	75.2	5.07	17.30	4.06	13.84	5.76	19.65	4.20	14.35	5.93	20.24	3.50	11.94
					27	80.6	5.12	17.47	4.15	14.15	5.82	19.85	4.42	15.09	5.99	20.45	3.90	13.29
					31	87.8	5.17	17.64	4.34	14.82	5.88	20.05	4.64	15.84	6.05	20.65	4.24	14.46
	1680	989	15	0.06	23	73.4	4.07	13.89	3.05	10.42	4.63	15.79	3.10	10.58	4.77	16.26	2.57	8.78
					24	75.2	4.58	15.63	3.66	12.50	5.20	17.76	3.59	12.25	5.36	18.29	3.16	10.79
					27	80.6	4.63	15.79	3.75	12.79	5.26	17.94	3.79	12.92	5.42	18.48	3.52	12.01
					31	87.8	4.67	15.94	3.93	13.39	5.31	18.12	3.93	13.41	5.47	18.66	3.83	13.06
	1600	942	25	0.1	23	73.4	4.29	14.65	3.22	10.98	4.88	16.64	3.07	10.48	5.02	17.14	2.71	9.26
					24	75.2	4.34	14.79	3.47	11.84	4.93	16.81	3.25	11.10	5.08	17.32	2.99	10.22
					27	80.6	4.38	14.94	3.55	12.10	4.98	16.98	3.43	11.72	5.13	17.49	3.33	11.37
					31	87.8	4.42	15.09	3.72	12.68	5.03	17.15	3.57	12.18	5.18	17.67	3.62	12.37
Mid Speed	1600	942	0	0	23	73.4	4.92	16.78	3.69	12.58	5.59	19.07	3.91	13.35	5.76	19.64	3.11	10.60
					24	75.2	4.97	16.95	3.97	13.56	5.64	19.26	4.12	14.06	5.81	19.84	3.43	11.70
					27	80.6	5.02	17.12	4.06	13.87	5.70	19.45	4.33	14.79	5.87	20.04	3.82	13.03
					31	87.8	5.07	17.29	4.26	14.52	5.76	19.65	4.55	15.52	5.93	20.24	4.15	14.17
	1480	871	15	0.06	23	73.4	3.99	13.61	2.99	10.21	4.53	15.47	3.04	10.37	4.67	15.93	2.52	8.60
					24	75.2	4.49	15.32	3.59	12.25	5.10	17.40	3.52	12.01	5.25	17.93	3.10	10.58
					27	80.6	4.53	15.47	3.67	12.53	5.15	17.58	3.71	12.66	5.31	18.11	3.45	11.77
					31	87.8	4.58	15.62	3.85	13.12	5.20	17.76	3.85	13.14	5.36	18.29	3.75	12.80
	1400	824	25	0.1	23	73.4	4.21	14.35	3.15	10.76	4.78	16.31	3.01	10.27	4.92	16.80	2.66	9.07
					24	75.2	4.25	14.50	3.40	11.60	4.83	16.48	3.19	10.87	4.97	16.97	2.93	10.01
					27	80.6	4.29	14.65	3.48	11.86	4.88	16.64	3.37	11.48	5.02	17.14	3.27	11.14
					31	87.8	4.34	14.79	3.64	12.42	4.93	16.81	3.50	11.93	5.07	17.31	3.55	12.12
Low Speed	1400	824	0	0	23	73.4	4.77	16.26	3.10	10.57	5.42	18.48	3.79	12.94	5.58	19.04	2.79	9.52
					24	75.2	4.82	16.43	3.42	11.67	5.47	18.67	3.99	13.63	5.64	19.23	3.10	10.58
					27	80.6	4.86	16.60	3.50	11.95	5.53	18.86	4.20	14.33	5.69	19.43	3.42	11.66
					31	87.8	4.91	16.76	3.64	12.40	5.58	19.05	4.41	15.05	5.75	19.62	3.74	12.75
	1280	753	15	0.06	23	73.4	3.87	13.20	2.51	8.58	4.40	15.00	2.94	10.05	4.53	15.45	2.26	7.72
					24	75.2	4.35	14.85	3.09	10.54	4.94	16.87	3.41	11.64	5.09	17.38	2.80	9.56
					27	80.6	4.40	15.00	3.16	10.80	4.99	17.04	3.60	12.27	5.14	17.55	3.09	10.53
					31	87.8	4.44	15.15	3.29	11.21	5.04	17.21	3.73	12.74	5.20	17.73	3.38	11.52
	1200	706	25	0.1	23	73.4	4.08	13.91	2.65	9.04	4.63	15.81	2.92	9.96	4.77	16.28	2.39	8.14
					24	75.2	4.12	14.05	2.92	9.98	4.68	15.97	3.09	10.54	4.82	16.45	2.65	9.05
					27	80.6	4.16	14.20	3.00	10.22	4.73	16.13	3.26	11.13	4.87	16.62	2.92	9.97
					31	87.8	4.20	14.34	3.11	10.61	4.78	16.29	3.39	11.57	4.92	16.78	3.20	10.91

GFH30K3CI

Fan speed	Air Flow Rate		ESP		Entering Air DBT		Outdoor Air Dry Bulb Temperature 95 ℉ (35℃)											
							Indoor Air Wet Bulb Temperature ℉ (℃)											
							62 ℉ (17℃)				67 ℉ (19℃)				72 ℉ (22℃)			
							Total Capacity		Sensible Capacity		Total Capacity		Sensible Capacity		Total Capacity		Sensible Capacity	
	m^3/h	cfm	Pa	in.wg	℃	℉	kW	KBtu /h	kW	KBtu /h	kW	KBtu /h	kW	KBtu /h	kW	KBtu /h	kW	KBtu /h
Hight Speed	1730	1018	0	0	23	73.4	7.08	24.16	5.31	18.12	8.05	27.45	5.63	19.22	8.29	28.28	4.48	15.27
					24	75.2	7.15	24.40	5.72	19.52	8.13	27.73	5.93	20.24	8.37	28.56	4.94	16.85
					27	80.6	7.22	24.65	5.85	19.97	8.21	28.01	6.24	21.29	8.46	28.85	5.50	18.75
					31	87.8	7.30	24.90	6.13	20.91	8.29	28.29	6.55	22.35	8.54	29.14	5.98	20.40
	1600	942	20	0.08	23	73.4	6.66	22.71	4.99	17.03	7.56	25.81	5.07	17.29	7.79	26.58	4.21	14.35
					24	75.2	6.72	22.94	5.38	18.35	7.64	26.07	5.27	17.99	7.87	26.85	4.64	15.84
					27	80.6	6.79	23.17	5.50	18.77	7.72	26.33	5.56	18.96	7.95	27.12	5.17	17.63
					31	87.8	6.86	23.40	5.76	19.66	7.79	26.60	5.77	19.68	8.03	27.39	5.62	19.18
	1500	883	37	0.15	23	73.4	6.09	20.78	4.57	15.58	6.92	23.61	4.36	14.87	7.13	24.32	3.85	13.13
					24	75.2	6.15	20.99	4.92	16.79	6.99	23.85	4.61	15.74	7.20	24.57	4.25	14.49
					27	80.6	6.21	21.20	5.03	17.17	7.06	24.09	4.87	16.62	7.27	24.81	4.73	16.13
					31	87.8	6.28	21.41	5.27	17.99	7.13	24.33	5.06	17.28	7.35	25.06	5.14	17.54
Mid Speed	1530	901	0	0	23	73.4	6.94	23.67	5.20	17.76	7.88	26.90	5.52	18.83	8.12	27.71	4.39	14.96
					24	75.2	7.01	23.92	5.61	19.13	7.97	27.18	5.81	19.84	8.20	27.99	4.84	16.52
					27	80.6	7.08	24.16	5.74	19.57	8.05	27.45	6.11	20.86	8.29	28.28	5.39	18.38
					31	87.8	7.15	24.40	6.01	20.50	8.13	27.73	6.42	21.90	8.37	28.56	5.86	19.99
	1400	824	20	0.08	23	73.4	6.52	22.25	4.89	16.69	7.41	25.29	4.97	16.94	7.63	26.05	4.12	14.07
					24	75.2	6.59	22.48	5.27	17.99	7.49	25.55	5.17	17.63	7.71	26.31	4.55	15.52
					27	80.6	6.66	22.71	5.39	18.39	7.56	25.81	5.45	18.58	7.79	26.58	5.06	17.28
					31	87.8	6.72	22.94	5.65	19.27	7.64	26.06	5.65	19.29	7.87	26.85	5.51	18.79
	1300	765	37	0.15	23	73.4	5.97	20.36	4.48	15.27	6.78	23.14	4.27	14.58	6.98	23.83	3.77	12.87
					24	75.2	6.03	20.57	4.82	16.45	6.85	23.37	4.52	15.43	7.06	24.07	4.16	14.20
					27	80.6	6.09	20.78	4.93	16.83	6.92	23.61	4.77	16.29	7.13	24.32	4.63	15.81
					31	87.8	6.15	20.98	5.17	17.63	6.99	23.85	4.96	16.93	7.20	24.56	5.04	17.19
Low Speed	1330	783	0	0	23	73.4	6.73	22.95	4.37	14.92	7.64	26.08	5.35	18.26	7.87	26.86	3.94	13.43
					24	75.2	6.79	23.18	4.82	16.46	7.72	26.35	5.64	19.23	7.95	27.14	4.37	14.92
					27	80.6	6.86	23.42	4.94	16.86	7.80	26.61	5.93	20.23	8.03	27.41	4.82	16.45
					31	87.8	6.93	23.65	5.13	17.50	7.88	26.88	6.22	21.23	8.11	27.68	5.27	17.99
	1100	647	20	0.08	23	73.4	6.32	21.57	4.11	14.02	7.18	24.51	4.81	16.42	7.40	25.25	3.70	12.63
					24	75.2	6.39	21.79	4.53	15.47	7.26	24.77	5.01	17.09	7.48	25.51	4.11	14.03
					27	80.6	6.45	22.01	4.65	15.85	7.33	25.02	5.28	18.01	7.55	25.77	4.53	15.46
					31	87.8	6.52	22.23	4.82	16.45	7.40	25.27	5.48	18.70	7.63	26.02	4.96	16.92
	1000	589	37	0.15	23	73.4	5.78	19.74	3.76	12.83	6.57	22.43	4.14	14.13	6.77	23.10	3.39	11.55
					24	75.2	5.84	19.94	4.15	14.16	6.64	22.66	4.38	14.95	6.84	23.34	3.76	12.84
					27	80.6	5.90	20.14	4.25	14.50	6.71	22.89	4.63	15.79	6.91	23.57	4.15	14.14
					31	87.8	5.96	20.34	4.41	15.05	6.77	23.12	4.81	16.41	6.98	23.81	4.54	15.48

Fan speed	Air Flow Rate		ESP		Entering Air DBT		Outdoor Air Dry Bulb Temperature 109 ℉ (43℃)											
							Indoor Air Wet Bulb Temperature ℉ (℃)											
							62 ℉ (17℃)				67 ℉ (19℃)				72 ℉ (22℃)			
							Total Capacity		Sensible Capacity		Total Capacity		Sensible Capacity		Total Capacity		Sensible Capacity	
	m^3/h	cfm	Pa	in.wg	℃	℉	kW	KBtu /h	kW	KBtu /h	kW	KBtu /h	kW	KBtu /h	kW	KBtu /h	kW	KBtu /h
Hight Speed	1730	1018	0	0	23.4	73.4	6.02	20.53	4.51	15.40	6.84	23.33	4.79	16.33	7.04	24.03	3.80	12.98
					24	75.2	6.08	20.74	4.86	16.60	6.91	23.57	5.04	17.21	7.12	24.28	4.20	14.33
					27	80.6	6.14	20.95	4.97	16.97	6.98	23.81	5.30	18.10	7.19	24.52	4.67	15.94
					31	87.8	6.20	21.16	5.21	17.78	7.05	24.05	5.57	19.00	7.26	24.77	5.08	17.34
	1600	942	20	0.08	23	73.4	5.09	17.35	3.81	13.02	5.78	19.72	3.87	13.21	5.95	20.31	3.21	10.97
					24	75.2	5.72	19.52	4.58	15.62	6.50	22.19	4.49	15.31	6.70	22.85	3.95	13.48
					27	80.6	5.78	19.72	4.68	15.97	6.57	22.41	4.73	16.14	6.77	23.08	4.40	15.00
					31	87.8	5.84	19.92	4.90	16.73	6.63	22.63	4.91	16.75	6.83	23.31	4.78	16.32
	1500	883	37	0.15	23	73.4	5.38	18.36	4.04	13.77	6.11	20.86	3.85	13.14	6.30	21.49	3.40	11.60
					24	75.2	5.44	18.55	4.35	14.84	6.18	21.08	4.08	13.91	6.36	21.71	3.75	12.81
					27	80.6	5.49	18.73	4.45	15.18	6.24	21.29	4.31	14.69	6.43	21.93	4.18	14.25
					31	87.8	5.55	18.92	4.66	15.89	6.30	21.50	4.47	15.27	6.49	22.15	4.54	15.50
Mid Speed	1530	901	0	0	23	73.4	5.90	20.12	4.42	15.09	6.70	22.87	4.69	16.01	6.90	23.55	3.73	12.72
					24	75.2	5.96	20.33	4.77	16.26	6.77	23.10	4.94	16.86	6.97	23.79	4.11	14.04
					27	80.6	6.02	20.53	4.87	16.63	6.84	23.33	5.20	17.73	7.04	24.03	4.58	15.62
					31	87.8	6.08	20.74	5.11	17.42	6.91	23.57	5.46	18.62	7.11	24.27	4.98	16.99
	1400	824	20	0.08	23	73.4	4.98	17.01	3.74	12.76	5.66	19.33	3.80	12.95	5.83	19.91	3.15	10.75
					24	75.2	5.61	19.13	4.49	15.31	6.37	21.74	4.40	15.00	6.56	22.39	3.87	13.21
					27	80.6	5.66	19.33	4.59	15.65	6.44	21.96	4.63	15.81	6.63	22.62	4.31	14.70
					31	87.8	5.72	19.52	4.81	16.40	6.50	22.18	4.81	16.41	6.70	22.85	4.69	15.99
	1300	765	37	0.15	23	73.4	5.27	17.99	3.96	13.49	5.99	20.45	3.78	12.88	6.17	21.06	3.33	11.37
					24	75.2	5.33	18.18	4.26	14.54	6.05	20.66	4.00	13.63	6.24	21.27	3.68	12.55
					27	80.6	5.38	18.36	4.36	14.87	6.11	20.86	4.22	14.40	6.30	21.49	4.09	13.97
					31	87.8	5.43	18.54	4.57	15.58	6.18	21.07	4.38	14.96	6.36	21.70	4.45	15.19
Low Speed	1330	783	0	0	23	73.4	5.72	19.51	3.72	12.68	6.50	22.17	4.55	15.52	6.69	22.83	3.35	11.42
					24	75.2	5.78	19.71	4.10	13.99	6.56	22.39	4.79	16.35	6.76	23.07	3.72	12.69
					27	80.6	5.83	19.91	4.20	14.33	6.63	22.62	5.04	17.19	6.83	23.30	4.10	13.98
					31	87.8	5.89	20.10	4.36	14.88	6.70	22.85	5.29	18.05	6.90	23.53	4.48	15.30
	1100	647	20	0.08	23	73.4	4.83	16.49	3.14	10.72	5.49	18.73	3.68	12.55	5.66	19.30	2.83	9.65
					24	75.2	5.44	18.55	3.86	13.17	6.18	21.08	4.26	14.54	6.36	21.71	3.50	11.94
					27	80.6	5.49	18.73	3.95	13.49	6.24	21.29	4.49	15.33	6.43	21.93	3.86	13.16
					31	87.8	5.55	18.92	4.10	14.00	6.30	21.50	4.66	15.91	6.49	22.15	4.22	14.40
	1000	589	37	0.15	23	73.4	5.11	17.44	3.32	11.34	5.81	19.82	3.66	12.49	5.98	20.42	2.99	10.21
					24	75.2	5.16	17.62	3.67	12.51	5.87	20.02	3.87	13.22	6.04	20.62	3.32	11.34
					27	80.6	5.22	17.80	3.76	12.81	5.93	20.23	4.09	13.96	6.11	20.83	3.66	12.50
					31	87.8	5.27	17.98	3.90	13.30	5.99	20.43	4.25	14.50	6.17	21.04	4.01	13.68

Fan speed	Air Flow Rate		ESP		Entering Air DBT		Outdoor Air Dry Bulb Temperature 118 ℉ (48℃)											
							Indoor Air Wet Bulb Temperature ℉ (℃)											
							62 ℉ (17℃)				67 ℉ (19℃)				72 ℉ (22℃)			
							Total Capacity		Sensible Capacity		Total Capacity		Sensible Capacity		Total Capacity		Sensible Capacity	
	m^3/h	cfm	Pa	in.wg	℃	℉	kW	KBtu /h	kW	KBtu /h	kW	KBtu /h	kW	KBtu /h	kW	KBtu /h	kW	KBtu /h
Hight Speed	1730	1018	0	0	23	73.4	5.88	20.05	4.41	15.04	6.68	22.79	4.67	15.95	6.88	23.47	3.71	12.67
					24	75.2	5.94	20.26	4.75	16.20	6.75	23.02	4.92	16.80	6.95	23.71	4.10	13.99
					27	80.6	6.00	20.46	4.86	16.57	6.81	23.25	5.18	17.67	7.02	23.95	4.56	15.57
					31	87.8	6.06	20.66	5.09	17.36	6.88	23.48	5.44	18.55	7.09	24.19	4.96	16.93
	1600	942	20	0.08	23	73.4	4.77	16.27	3.58	12.20	5.42	18.49	3.63	12.39	5.58	19.04	3.01	10.28
					24	75.2	5.36	18.30	4.29	14.64	6.10	20.80	4.21	14.35	6.28	21.42	3.70	12.64
					27	80.6	5.42	18.49	4.39	14.98	6.16	21.01	4.43	15.13	6.34	21.64	4.12	14.07
					31	87.8	5.47	18.67	4.60	15.69	6.22	21.22	4.60	15.70	6.41	21.86	4.48	15.30
	1500	883	37	0.15	23	73.4	5.03	17.15	3.77	12.86	5.71	19.49	3.60	12.28	5.88	20.08	3.18	10.84
					24	75.2	5.08	17.33	4.06	13.86	5.77	19.69	3.81	13.00	5.94	20.28	3.51	11.97
					27	80.6	5.13	17.50	4.15	14.18	5.83	19.89	4.02	13.72	6.00	20.49	3.90	13.32
					31	87.8	5.18	17.68	4.35	14.85	5.89	20.09	4.18	14.26	6.06	20.69	4.24	14.48
Mid Speed	1530	901	0	0	23	73.4	5.76	19.65	4.32	14.74	6.54	22.33	4.58	15.63	6.74	23.00	3.64	12.42
					24	75.2	5.82	19.85	4.65	15.88	6.61	22.56	4.83	16.47	6.81	23.23	4.02	13.71
					27	80.6	5.88	20.05	4.76	16.24	6.68	22.79	5.08	17.32	6.88	23.47	4.47	15.25
					31	87.8	5.94	20.25	4.99	17.01	6.74	23.01	5.33	18.18	6.95	23.70	4.86	16.59
	1400	824	20	0.08	23	73.4	4.67	15.94	3.50	11.96	5.31	18.12	3.56	12.14	5.47	18.66	2.95	10.08
					24	75.2	5.26	17.94	4.21	14.35	5.97	20.38	4.12	14.06	6.15	20.99	3.63	12.39
					27	80.6	5.31	18.12	4.30	14.68	6.03	20.59	4.34	14.82	6.22	21.21	4.04	13.78
					31	87.8	5.36	18.30	4.51	15.37	6.09	20.80	4.51	15.39	6.28	21.42	4.39	14.99
	1300	765	37	0.15	23	73.4	4.93	16.81	3.69	12.61	5.60	19.10	3.53	12.03	5.77	19.67	3.11	10.62
					24	75.2	4.98	16.98	3.98	13.58	5.66	19.30	3.73	12.74	5.83	19.88	3.44	11.73
					27	80.6	5.03	17.15	4.07	13.89	5.71	19.49	3.94	13.45	5.88	20.08	3.82	13.05
					31	87.8	5.08	17.32	4.26	14.55	5.77	19.69	4.10	13.98	5.94	20.28	4.16	14.19
Low Speed	1330	783	0	0	23	73.4	5.58	19.05	3.63	12.38	6.34	21.65	4.44	15.15	6.53	22.30	3.27	11.15
					24	75.2	5.64	19.24	4.00	13.66	6.41	21.87	4.68	15.96	6.60	22.52	3.63	12.39
					27	80.6	5.70	19.44	4.10	13.99	6.47	22.09	4.92	16.79	6.67	22.75	4.00	13.65
					31	87.8	5.75	19.63	4.26	14.53	6.54	22.31	5.17	17.62	6.73	22.98	4.38	14.94
	1100	647	20	0.08	23	73.4	4.53	15.46	2.94	10.05	5.15	17.56	3.45	11.77	5.30	18.09	2.65	9.05
					24	75.2	5.10	17.39	3.62	12.35	5.79	19.76	4.00	13.63	5.96	20.35	3.28	11.19
					27	80.6	5.15	17.56	3.71	12.65	5.85	19.96	4.21	14.37	6.03	20.56	3.62	12.33
					31	87.8	5.20	17.74	3.85	13.13	5.91	20.16	4.37	14.92	6.09	20.76	3.96	13.50
	1000	589	37	0.15	23	73.4	4.78	16.29	3.10	10.59	5.43	18.52	3.42	11.67	5.59	19.07	2.79	9.54
					24	75.2	4.82	16.46	3.43	11.69	5.48	18.71	3.62	12.35	5.65	19.27	3.11	10.60
					27	80.6	4.87	16.63	3.51	11.97	5.54	18.89	3.82	13.04	5.70	19.46	3.42	11.68
					31	87.8	4.92	16.79	3.64	12.43	5.59	19.08	3.97	13.55	5.76	19.66	3.74	12.78

GFH36K3CI

Fan speed	Air Flow Rate		ESP		Entering Air DBT		Outdoor Air Dry Bulb Temperature 95 ℉ (35℃)											
							Indoor Air Wet Bulb Temperature ℉ (℃)											
							62 ℉ (17℃)				67 ℉ (19℃)				72 ℉ (22℃)			
							Total Capacity		Sensible Capacity		Total Capacity		Sensible Capacity		Total Capacity		Sensible Capacity	
	m^3/h	cfm	Pa	in.wg	℃	℉	kW	KBtu /h	kW	KBtu /h	kW	KBtu /h	kW	KBtu /h	kW	KBtu /h	kW	KBtu /h
Hight Speed	2500	1471	0	0	23	73.4	8.88	30.31	6.66	22.73	10.09	34.44	7.07	24.11	10.40	35.47	5.61	19.16
					24	75.2	8.97	30.62	7.18	24.49	10.20	34.79	7.44	25.40	10.50	35.84	6.20	21.14
					27	80.6	9.06	30.93	7.34	25.05	10.30	35.14	7.83	26.71	10.61	36.20	6.90	23.53
					31	87.8	9.15	31.24	7.69	26.24	10.40	35.50	8.22	28.04	10.72	36.56	7.50	25.59
	2400	1413	20	0.08	23	73.4	8.35	28.49	6.26	21.37	9.49	32.37	6.36	21.69	9.77	33.35	5.28	18.01
					24	75.2	8.43	28.78	6.75	23.02	9.59	32.70	6.61	22.57	9.87	33.69	5.82	19.87
					27	80.6	8.52	29.07	6.90	23.55	9.68	33.03	6.97	23.79	9.97	34.03	6.48	22.12
					31	87.8	8.61	29.36	7.23	24.66	9.78	33.37	7.24	24.69	10.07	34.37	7.05	24.06
	2300	1354	37	0.15	23	73.4	7.64	26.06	5.73	19.55	8.68	29.62	5.47	18.66	8.94	30.51	4.83	16.47
					24	75.2	7.72	26.33	6.17	21.06	8.77	29.92	5.79	19.75	9.03	30.82	5.33	18.18
					27	80.6	7.80	26.60	6.31	21.54	8.86	30.22	6.11	20.85	9.12	31.13	5.93	20.23
					31	87.8	7.87	26.86	6.61	22.56	8.95	30.53	6.35	21.67	9.21	31.44	6.45	22.01
Mid Speed	2300	1354	0	0	23	73.4	8.71	29.70	6.53	22.28	9.89	33.75	6.92	23.63	10.19	34.76	5.50	18.77
					24	75.2	8.79	30.00	7.04	24.00	9.99	34.10	7.29	24.89	10.29	35.12	6.07	20.72
					27	80.6	8.88	30.31	7.20	24.55	10.09	34.44	7.67	26.17	10.40	35.47	6.76	23.06
					31	87.8	8.97	30.61	7.54	25.71	10.19	34.79	8.05	27.48	10.50	35.83	7.35	25.08
	2200	1295	20	0.08	23	73.4	8.18	27.92	6.14	20.94	9.30	31.73	6.23	21.26	9.58	32.68	5.17	17.65
					24	75.2	8.27	28.20	6.61	22.56	9.39	32.05	6.48	22.11	9.68	33.01	5.71	19.48
					27	80.6	8.35	28.49	6.76	23.08	9.49	32.37	6.83	23.31	9.77	33.35	6.35	21.67
					31	87.8	8.43	28.77	7.08	24.17	9.58	32.70	7.09	24.20	9.87	33.68	6.91	23.58
	2100	1236	37	0.15	23	73.4	7.49	25.54	5.61	19.16	8.51	29.03	5.36	18.29	8.76	29.90	4.73	16.14
					24	75.2	7.56	25.80	6.05	20.64	8.59	29.32	5.67	19.35	8.85	30.20	5.22	17.82
					27	80.6	7.64	26.06	6.19	21.11	8.68	29.62	5.99	20.44	8.94	30.51	5.81	19.83
					31	87.8	7.72	26.33	6.48	22.11	8.77	29.92	6.23	21.24	9.03	30.81	6.32	21.57
Low Speed	2050	1207	0	0	23	73.4	8.44	28.79	5.49	18.72	9.59	32.72	6.71	22.90	9.88	33.70	4.94	16.85
					24	75.2	8.52	29.09	6.05	20.65	9.69	33.05	7.07	24.13	9.98	34.04	5.49	18.72
					27	80.6	8.61	29.38	6.20	21.15	9.79	33.39	7.44	25.37	10.08	34.39	6.05	20.63
					31	87.8	8.70	29.67	6.44	21.96	9.88	33.72	7.81	26.64	10.18	34.73	6.62	22.58
	1950	1148	20	0.08	23	73.4	7.93	27.06	5.16	17.59	9.01	30.76	6.04	20.61	9.28	31.68	4.64	15.84
					24	75.2	8.01	27.34	5.69	19.41	9.11	31.07	6.28	21.44	9.38	32.00	5.16	17.60
					27	80.6	8.09	27.62	5.83	19.88	9.20	31.38	6.62	22.60	9.47	32.32	5.68	19.39
					31	87.8	8.18	27.89	6.05	20.64	9.29	31.70	6.87	23.46	9.57	32.65	6.22	21.22
	1850	1089	37	0.15	23	73.4	7.26	24.76	4.72	16.09	8.25	28.14	5.20	17.73	8.49	28.98	4.25	14.49
					24	75.2	7.33	25.01	5.21	17.76	8.33	28.43	5.50	18.76	8.58	29.28	4.72	16.10
					27	80.6	7.41	25.27	5.33	18.19	8.42	28.71	5.81	19.81	8.67	29.57	5.20	17.74
					31	87.8	7.48	25.52	5.53	18.88	8.50	29.00	6.03	20.59	8.75	29.87	5.69	19.42

Fan speed	Air Flow Rate		ESP		Entering Air DBT		Outdoor Air Dry Bulb Temperature 109 ℉ (43℃)											
							Indoor Air Wet Bulb Temperature ℉ (℃)											
							62 ℉ (17℃)				67 ℉ (19℃)				72 ℉ (22℃)			
							Total Capacity		Sensible Capacity		Total Capacity		Sensible Capacity		Total Capacity		Sensible Capacity	
	m^3/h	cfm	Pa	in.wg	℃	℉	kW	KBtu /h	kW	KBtu /h	kW	KBtu /h	kW	KBtu /h	kW	KBtu /h	kW	KBtu /h
Hight Speed	2500	1471	0	0	23	73.4	7.55	25.76	5.66	19.32	8.58	29.27	6.01	20.49	8.84	30.15	4.77	16.28
					24	75.2	7.63	26.02	6.10	20.82	8.67	29.57	6.33	21.59	8.93	30.46	5.27	17.97
					27	80.6	7.70	26.29	6.24	21.29	8.76	29.87	6.65	22.70	9.02	30.77	5.86	20.00
					31	87.8	7.78	26.55	6.54	22.30	8.84	30.17	6.99	23.83	9.11	31.08	6.38	21.75
	2400	1413	20	0.08	23	73.4	6.38	21.77	4.79	16.33	7.25	24.74	4.86	16.58	7.47	25.48	4.03	13.76
					24	75.2	7.18	24.49	5.74	19.59	8.16	27.83	5.63	19.21	8.40	28.67	4.96	16.91
					27	80.6	7.25	24.74	5.87	20.04	8.24	28.11	5.93	20.24	8.49	28.96	5.52	18.82
					31	87.8	7.32	24.99	6.15	20.99	8.32	28.40	6.16	21.01	8.57	29.25	6.00	20.47
	2300	1354	37	0.15	23	73.4	6.75	23.03	5.06	17.28	7.67	26.17	4.83	16.49	7.90	26.96	4.27	14.56
					24	75.2	6.82	23.27	5.46	18.62	7.75	26.44	5.11	17.45	7.98	27.24	4.71	16.07
					27	80.6	6.89	23.50	5.58	19.04	7.83	26.71	5.40	18.43	8.06	27.51	5.24	17.88
					31	87.8	6.96	23.74	5.84	19.94	7.91	26.98	5.61	19.15	8.14	27.79	5.70	19.45
Mid Speed	2300	1354	0	0	23	73.4	7.40	25.25	5.55	18.93	8.41	28.69	5.89	20.08	8.66	29.55	4.68	15.96
					24	75.2	7.47	25.50	5.98	20.40	8.49	28.98	6.20	21.16	8.75	29.85	5.16	17.61
					27	80.6	7.55	25.76	6.12	20.87	8.58	29.27	6.52	22.25	8.84	30.15	5.74	19.60
					31	87.8	7.63	26.02	6.41	21.86	8.67	29.57	6.85	23.36	8.93	30.45	6.25	21.32
	2200	1295	20	0.08	23	73.4	6.25	21.34	4.69	16.00	7.11	24.25	4.76	16.25	7.32	24.97	3.95	13.49
					24	75.2	7.04	24.00	5.63	19.20	7.99	27.28	5.52	18.82	8.23	28.10	4.86	16.58
					27	80.6	7.11	24.25	5.76	19.64	8.08	27.55	5.81	19.84	8.32	28.38	5.41	18.45
					31	87.8	7.18	24.49	6.03	20.57	8.16	27.83	6.04	20.59	8.40	28.66	5.88	20.06
	2100	1236	37	0.15	23	73.4	6.62	22.57	4.96	16.93	7.52	25.65	4.74	16.16	7.74	26.42	4.18	14.27
					24	75.2	6.68	22.80	5.35	18.24	7.59	25.91	5.01	17.10	7.82	26.69	4.62	15.75
					27	80.6	6.75	23.03	5.47	18.66	7.67	26.17	5.29	18.06	7.90	26.96	5.14	17.52
					31	87.8	6.82	23.26	5.73	19.54	7.75	26.44	5.50	18.77	7.98	27.23	5.59	19.06
Low Speed	2050	1207	0	0	23	73.4	7.17	24.47	4.66	15.91	8.15	27.81	5.71	19.47	8.40	28.65	4.20	14.32
					24	75.2	7.25	24.72	5.14	17.55	8.23	28.09	6.01	20.51	8.48	28.94	4.66	15.92
					27	80.6	7.32	24.97	5.27	17.98	8.32	28.38	6.32	21.57	8.57	29.23	5.14	17.54
					31	87.8	7.39	25.22	5.47	18.66	8.40	28.66	6.64	22.64	8.65	29.52	5.62	19.19
	1950	1148	20	0.08	23	73.4	6.06	20.68	3.94	13.44	6.89	23.50	4.62	15.75	7.10	24.21	3.55	12.10
					24	75.2	6.82	23.27	4.84	16.52	7.75	26.44	5.35	18.25	7.98	27.24	4.39	14.98
					27	80.6	6.89	23.50	4.96	16.92	7.83	26.71	5.64	19.23	8.06	27.51	4.84	16.51
					31	87.8	6.96	23.74	5.15	17.57	7.91	26.98	5.85	19.96	8.14	27.79	5.29	18.06
	1850	1089	37	0.15	23	73.4	6.41	21.88	4.17	14.22	7.29	24.87	4.59	15.67	7.51	25.61	3.75	12.81
					24	75.2	6.48	22.11	4.60	15.69	7.36	25.12	4.86	16.58	7.58	25.87	4.17	14.23
					27	80.6	6.54	22.33	4.71	16.08	7.44	25.37	5.13	17.51	7.66	26.13	4.60	15.68
					31	87.8	6.61	22.55	4.89	16.69	7.51	25.63	5.33	18.20	7.74	26.40	5.03	17.16

Fan speed	Air Flow Rate		ESP		Entering Air DBT		Outdoor Air Dry Bulb Temperature 118 ℉ (48℃)											
							Indoor Air Wet Bulb Temperature ℉ (℃)											
							62 ℉ (17℃)				67 ℉ (19℃)				72 ℉ (22℃)			
							Total Capacity		Sensible Capacity		Total Capacity		Sensible Capacity		Total Capacity		Sensible Capacity	
	m^3/h	cfm	Pa	in.wg	℃	℉	kW	KBtu /h	kW	KBtu /h	kW	KBtu /h	kW	KBtu /h	kW	KBtu /h	kW	KBtu /h
Hight Speed	2500	1471	0	0	23	73.4	7.37	25.16	5.53	18.87	8.38	28.59	5.86	20.01	8.63	29.44	4.66	15.90
					24	75.2	7.45	25.41	5.96	20.33	8.46	28.88	6.18	21.08	8.72	29.74	5.14	17.55
					27	80.6	7.52	25.67	6.09	20.79	8.55	29.17	6.50	22.17	8.81	30.04	5.72	19.53
					31	87.8	7.60	25.93	6.38	21.78	8.63	29.46	6.82	23.27	8.89	30.34	6.23	21.24
	2400	1413	20	0.08	23	73.4	5.98	20.41	4.49	15.31	6.80	23.19	4.55	15.54	7.00	23.89	3.78	12.90
					24	75.2	6.73	22.96	5.38	18.37	7.65	26.09	5.28	18.00	7.88	26.88	4.65	15.86
					27	80.6	6.80	23.19	5.51	18.79	7.73	26.36	5.56	18.98	7.96	27.15	5.17	17.65
					31	87.8	6.87	23.43	5.77	19.68	7.80	26.62	5.77	19.70	8.04	27.42	5.63	19.19
	2300	1354	37	0.15	23	73.4	6.31	21.52	4.73	16.14	7.17	24.45	4.52	15.41	7.38	25.19	3.99	13.60
					24	75.2	6.37	21.74	5.10	17.39	7.24	24.70	4.78	16.30	7.46	25.44	4.40	15.01
					27	80.6	6.44	21.96	5.21	17.79	7.31	24.95	5.05	17.22	7.53	25.70	4.90	16.71
					31	87.8	6.50	22.18	5.46	18.63	7.39	25.20	5.24	17.89	7.61	25.96	5.33	18.17
Mid Speed	2300	1354	0	0	23	73.4	7.23	24.65	5.42	18.49	8.21	28.01	5.75	19.61	8.46	28.85	4.57	15.58
					24	75.2	7.30	24.90	5.84	19.92	8.29	28.30	6.05	20.66	8.54	29.15	5.04	17.20
					27	80.6	7.37	25.16	5.97	20.38	8.38	28.59	6.37	21.73	8.63	29.44	5.61	19.14
					31	87.8	7.45	25.41	6.25	21.34	8.46	28.87	6.68	22.81	8.72	29.74	6.10	20.82
	2200	1295	20	0.08	23	73.4	5.86	20.00	4.40	15.00	6.66	22.73	4.46	15.23	6.86	23.41	3.71	12.64
					24	75.2	6.60	22.50	5.28	18.00	7.49	25.57	5.17	17.64	7.72	26.34	4.55	15.54
					27	80.6	6.66	22.73	5.40	18.41	7.57	25.83	5.45	18.60	7.80	26.61	5.07	17.29
					31	87.8	6.73	22.96	5.65	19.28	7.65	26.09	5.66	19.31	7.88	26.87	5.51	18.81
	2100	1236	37	0.15	23	73.4	6.18	21.09	4.64	15.82	7.02	23.96	4.42	15.10	7.23	24.68	3.91	13.33
					24	75.2	6.24	21.30	4.99	17.04	7.10	24.21	4.68	15.98	7.31	24.93	4.31	14.71
					27	80.6	6.31	21.52	5.11	17.43	7.17	24.45	4.95	16.87	7.38	25.19	4.80	16.37
					31	87.8	6.37	21.73	5.35	18.26	7.24	24.70	5.14	17.54	7.46	25.44	5.22	17.81
Low Speed	2050	1207	0	0	23	73.4	7.00	23.90	4.55	15.53	7.96	27.16	5.57	19.01	8.20	27.97	4.10	13.99
					24	75.2	7.08	24.14	5.02	17.14	8.04	27.43	5.87	20.03	8.28	28.26	4.55	15.54
					27	80.6	7.15	24.39	5.15	17.56	8.12	27.71	6.17	21.06	8.37	28.54	5.02	17.13
					31	87.8	7.22	24.63	5.34	18.23	8.20	27.99	6.48	22.11	8.45	28.83	5.49	18.74
	1950	1148	20	0.08	23	73.4	5.68	19.39	3.69	12.60	6.46	22.04	4.33	14.76	6.65	22.70	3.33	11.35
					24	75.2	6.39	21.81	4.54	15.49	7.27	24.79	5.01	17.10	7.48	25.53	4.12	14.04
					27	80.6	6.46	22.04	4.65	15.87	7.34	25.04	5.28	18.03	7.56	25.79	4.54	15.47
					31	87.8	6.52	22.26	4.83	16.47	7.41	25.29	5.48	18.71	7.63	26.05	4.96	16.93
	1850	1089	37	0.15	23	73.4	5.99	20.44	3.89	13.29	6.81	23.23	4.29	14.64	7.01	23.93	3.51	11.96
					24	75.2	6.05	20.65	4.30	14.66	6.88	23.47	4.54	15.49	7.08	24.17	3.90	13.29
					27	80.6	6.11	20.86	4.40	15.02	6.95	23.70	4.79	16.36	7.16	24.42	4.29	14.65
					31	87.8	6.17	21.07	4.57	15.59	7.02	23.94	4.98	17.00	7.23	24.66	4.70	16.03

GFH42K3CI

Fan speed	Air Flow Rate		ESP		Entering Air DBT		Outdoor Air Dry Bulb Temperature 95 ℉ (35℃)											
							Indoor Air Wet Bulb Temperature ℉ (℃)											
							62 ℉ (17℃)				67 ℉ (19℃)				72 ℉ (22℃)			
							Total Capacity		Sensible Capacity		Total Capacity		Sensible Capacity		Total Capacity		Sensible Capacity	
	m^3/h	cfm	Pa	in.wg	℃	℉	kW	KBtu /h	kW	KBtu /h	kW	KBtu /h	kW	KBtu /h	kW	KBtu /h	kW	KBtu /h
Hight Speed	2500	1471	0	0	23	73.4	9.49	32.37	7.11	24.28	10.78	36.78	7.55	25.75	11.10	37.88	6.00	20.46
					24	75.2	9.58	32.70	7.67	26.16	10.89	37.16	7.95	27.12	11.22	38.27	6.62	22.58
					27	80.6	9.68	33.03	7.84	26.75	11.00	37.53	8.36	28.52	11.33	38.66	7.36	25.13
					31	87.8	9.78	33.36	8.21	28.02	11.11	37.91	8.78	29.95	11.44	39.04	8.01	27.33
	2400	1413	20	0.08	23	73.4	8.92	30.43	6.69	22.82	10.13	34.57	6.79	23.16	10.44	35.61	5.64	19.23
					24	75.2	9.01	30.74	7.21	24.59	10.24	34.93	7.06	24.10	10.54	35.98	6.22	21.23
					27	80.6	9.10	31.05	7.37	25.15	10.34	35.28	7.44	25.40	10.65	36.34	6.92	23.62
					31	87.8	9.19	31.36	7.72	26.34	10.44	35.63	7.73	26.37	10.76	36.70	7.53	25.69
	2300	1354	37	0.15	23	73.4	8.16	27.84	6.12	20.88	9.27	31.63	5.84	19.93	9.55	32.58	5.16	17.59
					24	75.2	8.24	28.12	6.59	22.50	9.37	31.95	6.18	21.09	9.65	32.91	5.69	19.42
					27	80.6	8.32	28.40	6.74	23.01	9.46	32.28	6.53	22.27	9.74	33.25	6.33	21.61
					31	87.8	8.41	28.69	7.06	24.10	9.55	32.60	6.78	23.15	9.84	33.58	6.89	23.50
Mid Speed	2300	1354	0	0	23	73.4	9.30	31.72	6.97	23.79	10.56	36.05	7.40	25.23	10.88	37.13	5.88	20.05
					24	75.2	9.39	32.04	7.51	25.64	10.67	36.41	7.79	26.58	10.99	37.51	6.49	22.13
					27	80.6	9.49	32.37	7.68	26.22	10.78	36.78	8.19	27.95	11.10	37.88	7.22	24.63
					31	87.8	9.58	32.69	8.05	27.46	10.89	37.15	8.60	29.35	11.21	38.26	7.85	26.78
	2200	1295	20	0.08	23	73.4	8.74	29.82	6.55	22.36	9.93	33.88	6.65	22.70	10.23	34.90	5.52	18.85
					24	75.2	8.83	30.12	7.06	24.10	10.03	34.23	6.92	23.62	10.33	35.26	6.10	20.80
					27	80.6	8.92	30.43	7.22	24.64	10.13	34.57	7.30	24.89	10.44	35.61	6.78	23.15
					31	87.8	9.01	30.73	7.57	25.81	10.23	34.92	7.57	25.84	10.54	35.97	7.38	25.18
	2100	1236	37	0.15	23	73.4	8.00	27.28	6.00	20.46	9.09	31.00	5.72	19.53	9.36	31.93	5.05	17.24
					24	75.2	8.08	27.56	6.46	22.05	9.18	31.32	6.06	20.67	9.45	32.26	5.58	19.03
					27	80.6	8.16	27.84	6.61	22.55	9.27	31.63	6.40	21.83	9.55	32.58	6.21	21.18
					31	87.8	8.24	28.11	6.92	23.62	9.36	31.95	6.65	22.68	9.64	32.91	6.75	23.03
Low Speed	2050	1207	0	0	23	73.4	9.01	30.75	5.86	19.99	10.24	34.94	7.17	24.46	10.55	35.99	5.27	18.00
					24	75.2	9.10	31.06	6.46	22.05	10.35	35.30	7.55	25.77	10.66	36.36	5.86	20.00
					27	80.6	9.20	31.38	6.62	22.59	10.45	35.66	7.94	27.10	10.76	36.73	6.46	22.04
					31	87.8	9.29	31.69	6.87	23.45	10.55	36.01	8.34	28.45	10.87	37.09	7.07	24.11
	1950	1148	20	0.08	23	73.4	8.47	28.90	5.51	18.79	9.63	32.85	6.45	22.01	9.92	33.83	4.96	16.92
					24	75.2	8.56	29.20	6.08	20.73	9.72	33.18	6.71	22.89	10.02	34.18	5.51	18.80
					27	80.6	8.64	29.49	6.22	21.24	9.82	33.52	7.07	24.13	10.12	34.52	6.07	20.71
					31	87.8	8.73	29.79	6.46	22.04	9.92	33.85	7.34	25.05	10.22	34.87	6.64	22.66
	1850	1089	37	0.15	23	73.4	7.75	26.44	5.04	17.19	8.81	30.05	5.55	18.93	9.07	30.95	4.54	15.48
					24	75.2	7.83	26.71	5.56	18.97	8.90	30.36	5.87	20.04	9.16	31.27	5.04	17.20
					27	80.6	7.91	26.98	5.69	19.43	8.99	30.66	6.20	21.16	9.26	31.58	5.55	18.95
					31	87.8	7.99	27.25	5.91	20.17	9.08	30.97	6.44	21.99	9.35	31.90	6.08	20.73

Fan speed	Air Flow Rate		ESP		Entering Air DBT		Outdoor Air Dry Bulb Temperature 109 ℉ (43℃)											
							Indoor Air Wet Bulb Temperature ℉ (℃)											
							62 ℉ (17℃)				67 ℉ (19℃)				72 ℉ (22℃)			
							Total Capacity		Sensible Capacity		Total Capacity		Sensible Capacity		Total Capacity		Sensible Capacity	
	m^3/h	cfm	Pa	in.wg	℃	℉	kW	KBtu /h	kW	KBtu /h	kW	KBtu /h	kW	KBtu /h	kW	KBtu /h	kW	KBtu /h
Hight Speed	2500	1471	0	0	23	73.4	8.06	27.51	6.05	20.63	9.16	31.26	6.41	21.88	9.44	32.20	5.10	17.39
					24	75.2	8.15	27.79	6.52	22.23	9.26	31.58	6.76	23.06	9.53	32.53	5.63	19.19
					27	80.6	8.23	28.07	6.66	22.74	9.35	31.90	7.11	24.25	9.63	32.86	6.26	21.36
					31	87.8	8.31	28.35	6.98	23.82	9.44	32.22	7.46	25.45	9.73	33.19	6.81	23.23
	2400	1413	20	0.08	23	73.4	6.81	23.25	5.11	17.44	7.74	26.42	5.19	17.70	7.98	27.22	4.31	14.70
					24	75.2	7.67	26.16	6.13	20.93	8.71	29.73	6.01	20.51	8.97	30.62	5.29	18.06
					27	80.6	7.74	26.42	6.27	21.40	8.80	30.03	6.34	21.62	9.06	30.93	5.89	20.10
					31	87.8	7.82	26.69	6.57	22.42	8.89	30.33	6.58	22.44	9.15	31.24	6.41	21.86
	2300	1354	37	0.15	23	73.4	7.21	24.60	5.41	18.45	8.19	27.95	5.16	17.61	8.44	28.79	4.56	15.55
					24	75.2	7.28	24.85	5.83	19.88	8.28	28.24	5.46	18.64	8.52	29.09	5.03	17.16
					27	80.6	7.36	25.10	5.96	20.33	8.36	28.52	5.77	19.68	8.61	29.38	5.60	19.10
					31	87.8	7.43	25.35	6.24	21.30	8.44	28.81	5.99	20.45	8.70	29.67	6.09	20.77
Mid Speed	2300	1354	0	0	23	73.4	7.90	26.96	5.93	20.22	8.98	30.64	6.29	21.45	9.25	31.56	4.99	17.04
					24	75.2	7.98	27.24	6.39	21.79	9.07	30.95	6.62	22.59	9.34	31.88	5.51	18.81
					27	80.6	8.06	27.51	6.53	22.29	9.16	31.26	6.96	23.76	9.44	32.20	6.13	20.93
					31	87.8	8.14	27.79	6.84	23.34	9.25	31.58	7.31	24.95	9.53	32.52	6.67	22.77
	2200	1295	20	0.08	23	73.4	6.68	22.79	5.01	17.09	7.59	25.89	5.08	17.35	7.82	26.67	4.22	14.40
					24	75.2	7.51	25.64	6.01	20.51	8.54	29.13	5.89	20.10	8.79	30.00	5.19	17.70
					27	80.6	7.59	25.89	6.15	20.97	8.62	29.43	6.21	21.19	8.88	30.31	5.77	19.70
					31	87.8	7.67	26.15	6.44	21.97	8.71	29.72	6.45	21.99	8.97	30.61	6.28	21.43
	2100	1236	37	0.15	23	73.4	7.07	24.11	5.30	18.08	8.03	27.39	5.06	17.26	8.27	28.22	4.47	15.24
					24	75.2	7.14	24.35	5.71	19.48	8.11	27.67	5.35	18.27	8.35	28.50	4.93	16.82
					27	80.6	7.21	24.60	5.84	19.93	8.19	27.95	5.65	19.29	8.44	28.79	5.49	18.72
					31	87.8	7.28	24.85	6.12	20.87	8.27	28.23	5.88	20.05	8.52	29.08	5.97	20.36
Low Speed	2050	1207	0	0	23	73.4	7.66	26.14	4.98	16.99	8.70	29.70	6.09	20.79	8.97	30.59	4.48	15.30
					24	75.2	7.74	26.40	5.49	18.75	8.79	30.00	6.42	21.90	9.06	30.90	4.98	17.00
					27	80.6	7.82	26.67	5.63	19.20	8.88	30.31	6.75	23.03	9.15	31.22	5.49	18.73
					31	87.8	7.89	26.94	5.84	19.93	8.97	30.61	7.09	24.18	9.24	31.53	6.01	20.49
	1950	1148	20	0.08	23	73.4	6.47	22.09	4.21	14.36	7.36	25.10	4.93	16.82	7.58	25.85	3.79	12.93
					24	75.2	7.28	24.85	5.17	17.64	8.28	28.24	5.71	19.48	8.52	29.09	4.69	16.00
					27	80.6	7.36	25.10	5.30	18.07	8.36	28.52	6.02	20.54	8.61	29.38	5.17	17.63
					31	87.8	7.43	25.35	5.50	18.76	8.44	28.81	6.25	21.32	8.70	29.67	5.65	19.29
	1850	1089	37	0.15	23	73.4	6.85	23.37	4.45	15.19	7.78	26.56	4.90	16.73	8.02	27.35	4.01	13.68
					24	75.2	6.92	23.61	4.91	16.76	7.86	26.83	5.19	17.71	8.10	27.63	4.45	15.20
					27	80.6	6.99	23.85	5.03	17.17	7.94	27.10	5.48	18.70	8.18	27.91	4.91	16.75
					31	87.8	7.06	24.08	5.22	17.82	8.02	27.37	5.70	19.43	8.26	28.19	5.37	18.32

Fan speed	Air Flow Rate		ESP		Entering Air DBT		Outdoor Air Dry Bulb Temperature 118 ℉ (48℃)											
							Indoor Air Wet Bulb Temperature ℉ (℃)											
							62 ℉ (17℃)				67 ℉ (19℃)				72 ℉ (22℃)			
							Total Capacity		Sensible Capacity		Total Capacity		Sensible Capacity		Total Capacity		Sensible Capacity	
	m^3/h	cfm	Pa	in.wg	℃	℉	kW	KBtu /h	kW	KBtu /h	kW	KBtu /h	kW	KBtu /h	kW	KBtu /h	kW	KBtu /h
Hight Speed	2500	1471	0	0	23	73.4	7.87	26.87	5.91	20.15	8.95	30.53	6.26	21.37	9.22	31.44	4.98	16.98
					24	75.2	7.95	27.14	6.36	21.71	9.04	30.84	6.60	22.51	9.31	31.77	5.49	18.74
					27	80.6	8.03	27.41	6.51	22.20	9.13	31.15	6.94	23.68	9.40	32.09	6.11	20.86
					31	87.8	8.11	27.69	6.82	23.26	9.22	31.46	7.28	24.86	9.50	32.41	6.65	22.68
	2400	1413	20	0.08	23	73.4	6.39	21.80	4.79	16.35	7.26	24.77	4.86	16.60	7.48	25.51	4.04	13.78
					24	75.2	7.19	24.52	5.75	19.62	8.17	27.87	5.64	19.23	8.41	28.70	4.96	16.94
					27	80.6	7.26	24.77	5.88	20.06	8.25	28.15	5.94	20.27	8.50	28.99	5.52	18.85
					31	87.8	7.33	25.02	6.16	21.02	8.33	28.43	6.17	21.04	8.58	29.28	6.01	20.50
	2300	1354	37	0.15	23	73.4	6.74	22.98	5.05	17.24	7.65	26.11	4.82	16.45	7.88	26.90	4.26	14.53
					24	75.2	6.80	23.22	5.44	18.57	7.73	26.38	5.10	17.41	7.96	27.17	4.70	16.03
					27	80.6	6.87	23.45	5.57	18.99	7.81	26.65	5.39	18.39	8.04	27.45	5.23	17.84
					31	87.8	6.94	23.68	5.83	19.89	7.89	26.91	5.60	19.11	8.12	27.72	5.69	19.41
Mid Speed	2300	1354	0	0	23	73.4	7.72	26.33	5.79	19.75	8.77	29.92	6.14	20.94	9.03	30.82	4.88	16.64
					24	75.2	7.79	26.60	6.24	21.28	8.86	30.22	6.47	22.06	9.12	31.13	5.38	18.37
					27	80.6	7.87	26.87	6.38	21.76	8.95	30.53	6.80	23.20	9.22	31.44	5.99	20.44
					31	87.8	7.95	27.13	6.68	22.79	9.04	30.83	7.14	24.36	9.31	31.76	6.52	22.23
	2200	1295	20	0.08	23	73.4	6.26	21.36	4.70	16.02	7.11	24.28	4.77	16.26	7.33	25.00	3.96	13.50
					24	75.2	7.04	24.03	5.63	19.23	8.00	27.31	5.52	18.84	8.24	28.13	4.86	16.60
					27	80.6	7.11	24.28	5.76	19.66	8.09	27.59	5.82	19.86	8.33	28.41	5.41	18.47
					31	87.8	7.19	24.52	6.04	20.60	8.17	27.86	6.04	20.62	8.41	28.70	5.89	20.09
	2100	1236	37	0.15	23	73.4	6.60	22.52	4.95	16.89	7.50	25.59	4.73	16.12	7.73	26.36	4.17	14.23
					24	75.2	6.67	22.75	5.33	18.20	7.58	25.85	5.00	17.06	7.80	26.63	4.60	15.71
					27	80.6	6.74	22.98	5.46	18.61	7.65	26.11	5.28	18.02	7.88	26.90	5.12	17.48
					31	87.8	6.80	23.21	5.71	19.50	7.73	26.38	5.49	18.73	7.96	27.17	5.57	19.02
Low Speed	2050	1207	0	0	23	73.4	7.48	25.52	4.86	16.59	8.50	29.00	5.95	20.30	8.76	29.87	4.38	14.94
					24	75.2	7.56	25.78	5.37	18.31	8.59	29.30	6.27	21.39	8.84	30.18	4.86	16.60
					27	80.6	7.63	26.04	5.50	18.75	8.67	29.59	6.59	22.49	8.93	30.48	5.36	18.29
					31	87.8	7.71	26.30	5.70	19.46	8.76	29.89	6.92	23.61	9.02	30.79	5.86	20.01
	1950	1148	20	0.08	23	73.4	6.07	20.71	3.95	13.46	6.90	23.53	4.62	15.77	7.10	24.24	3.55	12.12
					24	75.2	6.83	23.30	4.85	16.54	7.76	26.47	5.35	18.27	7.99	27.27	4.40	15.00
					27	80.6	6.90	23.53	4.97	16.94	7.84	26.74	5.64	19.25	8.07	27.54	4.84	16.53
					31	87.8	6.97	23.77	5.15	17.59	7.92	27.01	5.86	19.99	8.15	27.82	5.30	18.08
	1850	1089	37	0.15	23	73.4	6.40	21.83	4.16	14.19	7.27	24.81	4.58	15.63	7.49	25.55	3.74	12.78
					24	75.2	6.46	22.05	4.59	15.66	7.35	25.06	4.85	16.54	7.57	25.81	4.16	14.20
					27	80.6	6.53	22.28	4.70	16.04	7.42	25.32	5.12	17.47	7.64	26.07	4.59	15.64
					31	87.8	6.59	22.50	4.88	16.65	7.49	25.57	5.32	18.15	7.72	26.34	5.02	17.12

GFH48K3CI

Fan speed	Air Flow Rate		ESP		Entering Air DBT		Outdoor Air Dry Bulb Temperature 95 ℉ (35℃)											
							Indoor Air Wet Bulb Temperature ℉ (℃)											
							62 ℉ (17℃)				67 ℉ (19℃)				72 ℉ (22℃)			
							Total Capacity		Sensible Capacity		Total Capacity		Sensible Capacity		Total Capacity		Sensible Capacity	
	m^3/h	cfm	Pa	in.wg	℃	℉	kW	KBtu /h	kW	KBtu /h	kW	KBtu /h	kW	KBtu /h	kW	KBtu /h	kW	KBtu /h
Hight Speed	3000	1766	0	0	23	73.4	12.07	41.20	9.06	30.90	13.72	46.81	9.60	32.77	14.13	48.22	7.63	26.04
					24	75.2	12.20	41.62	9.76	33.29	13.86	47.29	10.12	34.52	14.28	48.71	8.42	28.74
					27	80.6	12.32	42.04	9.98	34.05	14.00	47.77	10.64	36.30	14.42	49.20	9.37	31.98
					31	87.8	12.44	42.46	10.45	35.66	14.14	48.25	11.17	38.11	14.56	49.69	10.19	34.79
	2800	1648	25	0.1	23	73.4	11.35	38.72	8.51	29.04	12.90	44.00	8.64	29.48	13.28	45.32	7.17	24.47
					24	75.2	11.46	39.12	9.17	31.29	13.03	44.45	8.99	30.67	13.42	45.79	7.92	27.01
					27	80.6	11.58	39.51	9.38	32.01	13.16	44.90	9.48	32.33	13.55	46.25	8.81	30.06
					31	87.8	11.70	39.91	9.83	33.52	13.29	45.35	9.84	33.56	13.69	46.71	9.58	32.70
	2600	1530	50	0.2	23	73.4	10.38	35.43	7.79	26.57	11.80	40.26	7.43	25.36	12.15	41.47	6.56	22.39
					24	75.2	10.49	35.79	8.39	28.63	11.92	40.67	7.87	26.84	12.28	41.89	7.24	24.71
					27	80.6	10.60	36.15	8.58	29.28	12.04	41.08	8.31	28.35	12.40	42.31	8.06	27.50
					31	87.8	10.70	36.51	8.99	30.67	12.16	41.49	8.63	29.46	12.53	42.74	8.77	29.92
Mid Speed	2400	1413	0	0	23	73.4	11.83	40.37	8.87	30.28	13.45	45.88	9.41	32.11	13.85	47.25	7.48	25.52
					24	75.2	11.95	40.78	9.56	32.63	13.58	46.34	9.92	33.83	13.99	47.73	8.25	28.16
					27	80.6	12.07	41.20	9.78	33.37	13.72	46.81	10.43	35.58	14.13	48.22	9.19	31.34
					31	87.8	12.19	41.61	10.24	34.95	13.86	47.28	10.95	37.35	14.27	48.70	9.99	34.09
	2250	1324	25	0.1	23	73.4	11.12	37.95	8.34	28.46	12.64	43.12	8.47	28.89	13.02	44.42	7.03	23.99
					24	75.2	11.24	38.34	8.99	30.67	12.77	43.56	8.81	30.06	13.15	44.87	7.76	26.47
					27	80.6	11.35	38.72	9.19	31.37	12.90	44.00	9.29	31.68	13.28	45.32	8.63	29.46
					31	87.8	11.46	39.11	9.63	32.85	13.03	44.44	9.64	32.89	13.42	45.78	9.39	32.04
	2100	1236	50	0.2	23	73.4	10.18	34.72	7.63	26.04	11.56	39.45	7.28	24.86	11.91	40.64	6.43	21.94
					24	75.2	10.28	35.07	8.22	28.06	11.68	39.86	7.71	26.31	12.03	41.05	7.10	24.22
					27	80.6	10.38	35.43	8.41	28.70	11.80	40.26	8.14	27.78	12.15	41.47	7.90	26.95
					31	87.8	10.49	35.78	8.81	30.06	11.92	40.66	8.46	28.87	12.27	41.88	8.59	29.32
Low Speed	2000	1177	0	0	23	73.4	11.47	39.14	7.46	25.44	13.03	44.47	9.12	31.13	13.43	45.81	6.71	22.90
					24	75.2	11.59	39.53	8.23	28.07	13.17	44.93	9.61	32.80	13.56	46.27	7.46	25.45
					27	80.6	11.70	39.93	8.43	28.75	13.30	45.38	10.11	34.49	13.70	46.74	8.22	28.04
					31	87.8	11.82	40.33	8.75	29.85	13.43	45.83	10.61	36.21	13.84	47.21	8.99	30.69
	1900	1118	25	0.1	23	73.4	10.78	36.79	7.01	23.91	12.25	41.80	8.21	28.01	12.62	43.06	6.31	21.53
					24	75.2	10.89	37.16	7.73	26.39	12.38	42.23	8.54	29.14	12.75	43.50	7.01	23.92
					27	80.6	11.00	37.54	7.92	27.03	12.50	42.66	9.00	30.71	12.88	43.94	7.73	26.36
					31	87.8	11.11	37.91	8.22	28.06	12.63	43.08	9.34	31.88	13.01	44.38	8.45	28.84
	1800	1059	50	0.2	23	73.4	9.86	33.66	6.41	21.88	11.21	38.25	7.06	24.09	11.55	39.39	5.77	19.70
					24	75.2	9.96	34.00	7.07	24.14	11.32	38.64	7.47	25.50	11.66	39.80	6.41	21.89
					27	80.6	10.07	34.34	7.25	24.73	11.44	39.03	7.89	26.93	11.78	40.20	7.07	24.12
					31	87.8	10.17	34.69	7.52	25.67	11.55	39.42	8.20	27.99	11.90	40.60	7.73	26.39

Fan speed	Air Flow Rate		ESP		Entering Air DBT		Outdoor Air Dry Bulb Temperature 109 ℉ (43℃)											
							Indoor Air Wet Bulb Temperature ℉ (℃)											
							62 ℉ (17℃)				67 ℉ (19℃)				72 ℉ (22℃)			
							Total Capacity		Sensible Capacity		Total Capacity		Sensible Capacity		Total Capacity		Sensible Capacity	
	m^3/h	cfm	Pa	in.wg	℃	℉	kW	KBtu /h	kW	KBtu /h	kW	KBtu /h	kW	KBtu /h	kW	KBtu /h	kW	KBtu /h
Hight Speed	3000	1766	0	0	23	73.4	10.26	35.02	7.70	26.26	11.66	39.79	8.16	27.85	12.01	40.98	6.49	22.13
					24	75.2	10.37	35.37	8.29	28.30	11.78	40.20	8.60	29.34	12.13	41.40	7.16	24.43
					27	80.6	10.47	35.73	8.48	28.94	11.90	40.60	9.04	30.86	12.26	41.82	7.97	27.18
					31	87.8	10.58	36.09	8.88	30.31	12.02	41.01	9.50	32.40	12.38	42.24	8.67	29.57
	2800	1648	25	0.1	23	73.4	8.67	29.59	6.50	22.19	9.86	33.63	6.60	22.53	10.15	34.64	5.48	18.70
					24	75.2	9.76	33.29	7.81	26.63	11.09	37.83	7.65	26.10	11.42	38.97	6.74	22.99
					27	80.6	9.86	33.63	7.98	27.24	11.20	38.21	8.06	27.51	11.54	39.36	7.50	25.58
					31	87.8	9.95	33.96	8.36	28.53	11.31	38.60	8.37	28.56	11.65	39.75	8.16	27.83
	2600	1530	50	0.2	23	73.4	9.18	31.31	6.88	23.48	10.43	35.58	6.57	22.41	10.74	36.64	5.80	19.79
					24	75.2	9.27	31.63	7.42	25.30	10.53	35.94	6.95	23.72	10.85	37.02	6.40	21.84
					27	80.6	9.36	31.95	7.58	25.88	10.64	36.30	7.34	25.05	10.96	37.39	7.12	24.31
					31	87.8	9.46	32.27	7.94	27.10	10.75	36.67	7.63	26.03	11.07	37.77	7.75	26.44
Mid Speed	2400	1413	0	0	23	73.4	10.06	34.32	7.54	25.74	11.43	38.99	8.00	27.30	11.77	40.16	6.36	21.69
					24	75.2	10.16	34.67	8.13	27.73	11.55	39.39	8.43	28.76	11.89	40.57	7.02	23.94
					27	80.6	10.26	35.02	8.31	28.36	11.66	39.79	8.86	30.24	12.01	40.98	7.81	26.64
					31	87.8	10.37	35.37	8.71	29.71	11.78	40.19	9.31	31.75	12.13	41.39	8.49	28.98
	2250	1324	25	0.1	23	73.4	8.50	29.00	6.37	21.75	9.66	32.96	6.47	22.08	9.95	33.94	5.37	18.33
					24	75.2	9.56	32.63	7.65	26.10	10.87	37.08	7.50	25.58	11.19	38.19	6.60	22.53
					27	80.6	9.66	32.96	7.82	26.69	10.98	37.45	7.90	26.96	11.31	38.57	7.35	25.07
					31	87.8	9.76	33.29	8.19	27.96	11.09	37.82	8.20	27.99	11.42	38.96	7.99	27.27
	2100	1236	50	0.2	23	73.4	8.99	30.68	6.74	23.01	10.22	34.87	6.44	21.97	10.53	35.91	5.68	19.39
					24	75.2	9.08	31.00	7.27	24.80	10.32	35.22	6.81	23.25	10.63	36.28	6.27	21.40
					27	80.6	9.18	31.31	7.43	25.36	10.43	35.58	7.19	24.55	10.74	36.64	6.98	23.82
					31	87.8	9.27	31.62	7.78	26.56	10.53	35.93	7.48	25.51	10.85	37.01	7.59	25.91
Low Speed	2000	1177	0	0	23	73.4	9.75	33.27	6.34	21.62	11.08	37.80	7.76	26.46	11.41	38.94	5.71	19.47
					24	75.2	9.85	33.60	6.99	23.86	11.19	38.19	8.17	27.88	11.53	39.33	6.34	21.63
					27	80.6	9.95	33.94	7.16	24.44	11.31	38.57	8.59	29.32	11.64	39.73	6.99	23.84
					31	87.8	10.05	34.28	7.44	25.37	11.42	38.96	9.02	30.78	11.76	40.13	7.64	26.08
	1900	1118	25	0.1	23	73.4	8.24	28.11	5.36	18.27	9.36	31.95	6.27	21.40	9.64	32.91	4.82	16.45
					24	75.2	9.27	31.63	6.58	22.46	10.53	35.94	7.27	24.80	10.85	37.02	5.97	20.36
					27	80.6	9.36	31.95	6.74	23.00	10.64	36.30	7.66	26.14	10.96	37.39	6.58	22.44
					31	87.8	9.46	32.27	7.00	23.88	10.75	36.67	7.95	27.13	11.07	37.77	7.19	24.55
	1800	1059	50	0.2	23	73.4	8.72	29.74	5.67	19.33	9.91	33.80	6.24	21.29	10.20	34.81	5.10	17.41
					24	75.2	8.81	30.05	6.25	21.33	10.01	34.14	6.60	22.53	10.31	35.17	5.67	19.34
					27	80.6	8.90	30.35	6.40	21.85	10.11	34.49	6.97	23.80	10.41	35.52	6.25	21.31
					31	87.8	8.98	30.65	6.65	22.68	10.21	34.83	7.25	24.73	10.52	35.88	6.83	23.32

Fan speed	Air Flow Rate		ESP		Entering Air DBT		Outdoor Air Dry Bulb Temperature 118 ℉ (48℃)											
							Indoor Air Wet Bulb Temperature ℉ (℃)											
							62 ℉ (17℃)				67 ℉ (19℃)				72 ℉ (22℃)			
							Total Capacity		Sensible Capacity		Total Capacity		Sensible Capacity		Total Capacity		Sensible Capacity	
	m^3/h	cfm	Pa	in.wg	℃	℉	kW	KBtu /h	kW	KBtu /h	kW	KBtu /h	kW	KBtu /h	kW	KBtu /h	kW	KBtu /h
Hight Speed	3000	1766	0	0	23	73.4	10.02	34.19	7.52	25.64	11.39	38.85	7.97	27.20	11.73	40.02	6.33	21.61
					24	75.2	10.12	34.54	8.10	27.63	11.50	39.25	8.40	28.65	11.85	40.43	6.99	23.85
					27	80.6	10.23	34.89	8.28	28.26	11.62	39.65	8.83	30.13	11.97	40.84	7.78	26.54
					31	87.8	10.33	35.24	8.68	29.60	11.74	40.04	9.27	31.63	12.09	41.25	8.46	28.87
	2800	1648	25	0.1	23	73.4	8.13	27.74	6.10	20.81	9.24	31.53	6.19	21.12	9.52	32.47	5.14	17.54
					24	75.2	9.15	31.21	7.32	24.97	10.40	35.47	7.17	24.47	10.71	36.53	6.32	21.55
					27	80.6	9.24	31.53	7.48	25.54	10.50	35.83	7.56	25.79	10.82	36.90	7.03	23.99
					31	87.8	9.33	31.84	7.84	26.75	10.61	36.18	7.85	26.78	10.92	37.27	7.65	26.09
	2600	1530	50	0.2	23	73.4	8.57	29.25	6.43	21.94	9.74	33.24	6.14	20.94	10.03	34.23	5.42	18.49
					24	75.2	8.66	29.55	6.93	23.64	9.84	33.58	6.49	22.16	10.14	34.58	5.98	20.40
					27	80.6	8.75	29.85	7.09	24.17	9.94	33.92	6.86	23.40	10.24	34.93	6.65	22.71
					31	87.8	8.83	30.14	7.42	25.32	10.04	34.25	7.13	24.32	10.34	35.28	7.24	24.70
Mid Speed	2400	1413	0	0	23	73.4	9.82	33.51	7.37	25.13	11.16	38.08	7.81	26.65	11.49	39.22	6.21	21.18
					24	75.2	9.92	33.85	7.94	27.08	11.27	38.47	8.23	28.08	11.61	39.62	6.85	23.38
					27	80.6	10.02	34.19	8.12	27.70	11.39	38.85	8.65	29.53	11.73	40.02	7.62	26.01
					31	87.8	10.12	34.53	8.50	29.01	11.50	39.24	9.09	31.00	11.85	40.42	8.29	28.29
	2250	1324	25	0.1	23	73.4	7.97	27.19	5.98	20.39	9.06	30.90	6.07	20.70	9.33	31.82	5.04	17.18
					24	75.2	8.96	30.59	7.17	24.47	10.19	34.76	7.03	23.98	10.49	35.80	6.19	21.12
					27	80.6	9.06	30.90	7.33	25.03	10.29	35.11	7.41	25.28	10.60	36.16	6.89	23.51
					31	87.8	9.15	31.21	7.68	26.21	10.39	35.46	7.69	26.24	10.70	36.52	7.49	25.57
	2100	1236	50	0.2	23	73.4	8.40	28.66	6.30	21.50	9.55	32.57	6.01	20.52	9.83	33.55	5.31	18.12
					24	75.2	8.49	28.96	6.79	23.16	9.64	32.90	6.36	21.72	9.93	33.89	5.86	20.00
					27	80.6	8.57	29.25	6.94	23.69	9.74	33.24	6.72	22.93	10.03	34.23	6.52	22.25
					31	87.8	8.66	29.54	7.27	24.81	9.84	33.57	6.99	23.83	10.13	34.58	7.09	24.20
Low Speed	2000	1177	0	0	23	73.4	9.52	32.48	6.19	21.11	10.82	36.91	7.57	25.84	11.14	38.02	5.57	19.01
					24	75.2	9.62	32.81	6.83	23.30	10.93	37.29	7.98	27.22	11.26	38.41	6.19	21.12
					27	80.6	9.71	33.15	6.99	23.86	11.04	37.67	8.39	28.63	11.37	38.80	6.82	23.28
					31	87.8	9.81	33.48	7.26	24.77	11.15	38.04	8.81	30.05	11.48	39.18	7.46	25.47
	1900	1118	25	0.1	23	73.4	7.72	26.36	5.02	17.13	8.78	29.95	5.88	20.07	9.04	30.85	4.52	15.42
					24	75.2	8.69	29.65	6.17	21.05	9.88	33.69	6.81	23.25	10.17	34.71	5.59	19.09
					27	80.6	8.78	29.95	6.32	21.56	9.98	34.03	7.18	24.50	10.27	35.06	6.16	21.03
					31	87.8	8.87	30.25	6.56	22.39	10.07	34.38	7.46	25.44	10.38	35.41	6.75	23.01
	1800	1059	50	0.2	23	73.4	8.14	27.79	5.29	18.06	9.25	31.58	5.83	19.89	9.53	32.52	4.77	16.26
					24	75.2	8.23	28.07	5.84	19.93	9.35	31.90	6.17	21.05	9.63	32.85	5.30	18.07
					27	80.6	8.31	28.35	5.98	20.41	9.44	32.22	6.52	22.23	9.73	33.19	5.84	19.91
					31	87.8	8.39	28.64	6.21	21.19	9.54	32.54	6.77	23.10	9.82	33.52	6.39	21.79

GFH60K3CI

Fan speed	Air Flow Rate		ESP		Entering Air DBT		Outdoor Air Dry Bulb Temperature 95 ℉ (35℃)											
							Indoor Air Wet Bulb Temperature ℉ (℃)											
							62 ℉ (17℃)				67 ℉ (19℃)				72 ℉ (22℃)			
							Total Capacity		Sensible Capacity		Total Capacity		Sensible Capacity		Total Capacity		Sensible Capacity	
	m^3/h	cfm	Pa	in.wg	℃	℉	kW	KBtu /h	kW	KBtu /h	kW	KBtu /h	kW	KBtu /h	kW	KBtu /h	kW	KBtu /h
Hight Speed	3550	2089	0	0	23	73.4	14.67	50.05	11.00	37.54	16.67	56.88	11.67	39.81	17.17	58.58	9.27	31.64
					24	75.2	14.82	50.56	11.86	40.45	16.84	57.46	12.29	41.94	17.35	59.18	10.23	34.92
					27	80.6	14.97	51.07	12.12	41.37	17.01	58.04	12.93	44.11	17.52	59.78	11.39	38.86
					31	87.8	15.12	51.58	12.70	43.33	17.18	58.62	13.57	46.31	17.70	60.38	12.39	42.26
	3350	1972	25	0.1	23	73.4	13.79	47.05	10.34	35.29	15.67	53.46	10.50	35.82	16.14	55.07	8.72	29.74
					24	75.2	13.93	47.53	11.14	38.02	15.83	54.01	10.92	37.27	16.30	55.63	9.62	32.82
					27	80.6	14.07	48.01	11.40	38.89	15.99	54.56	11.51	39.28	16.47	56.19	10.70	36.53
					31	87.8	14.21	48.49	11.94	40.73	16.15	55.10	11.95	40.78	16.63	56.75	11.64	39.73
	3150	1854	50	0.2	23	73.4	12.62	43.04	9.46	32.28	14.34	48.91	9.03	30.82	14.77	50.38	7.97	27.21
					24	75.2	12.74	43.48	10.20	34.79	14.48	49.41	9.56	32.61	14.92	50.90	8.80	30.03
					27	80.6	12.87	43.92	10.43	35.58	14.63	49.91	10.09	34.44	15.07	51.41	9.79	33.42
					31	87.8	13.00	44.36	10.92	37.26	14.77	50.41	10.49	35.79	15.22	51.92	10.65	36.35
Mid Speed	3300	1942	0	0	23	73.4	14.38	49.05	10.78	36.79	16.34	55.74	11.44	39.02	16.83	57.41	9.09	31.00
					24	75.2	14.52	49.55	11.62	39.64	16.50	56.31	12.05	41.11	17.00	58.00	10.03	34.22
					27	80.6	14.67	50.05	11.88	40.54	16.67	56.88	12.67	43.23	17.17	58.58	11.16	38.08
					31	87.8	14.82	50.55	12.45	42.46	16.84	57.45	13.30	45.38	17.34	59.17	12.14	41.42
	3100	1825	25	0.1	23	73.4	13.51	46.11	10.14	34.58	15.36	52.40	10.29	35.10	15.82	53.97	8.54	29.14
					24	75.2	13.65	46.58	10.92	37.26	15.51	52.93	10.70	36.52	15.98	54.52	9.43	32.17
					27	80.6	13.79	47.05	11.17	38.11	15.67	53.46	11.28	38.49	16.14	55.07	10.49	35.79
					31	87.8	13.93	47.52	11.70	39.92	15.83	54.00	11.71	39.96	16.30	55.62	11.41	38.93
	2900	1707	50	0.2	23	73.4	12.36	42.18	9.27	31.64	14.05	47.94	8.85	30.20	14.47	49.37	7.81	26.66
					24	75.2	12.49	42.61	9.99	34.09	14.19	48.43	9.37	31.96	14.62	49.88	8.62	29.43
					27	80.6	12.62	43.04	10.22	34.87	14.34	48.91	9.89	33.75	14.77	50.38	9.60	32.75
					31	87.8	12.74	43.48	10.70	36.52	14.48	49.40	10.28	35.08	14.91	50.89	10.44	35.62
Low Speed	3000	1766	0	0	23	73.4	13.94	47.55	9.06	30.91	15.84	54.03	11.09	37.82	16.31	55.65	8.16	27.83
					24	75.2	14.08	48.03	10.00	34.10	16.00	54.58	11.68	39.85	16.48	56.22	9.06	30.92
					27	80.6	14.22	48.52	10.24	34.93	16.16	55.14	12.28	41.90	16.64	56.79	9.99	34.07
					31	87.8	14.36	49.01	10.63	36.26	16.32	55.69	12.89	43.99	16.81	57.36	10.93	37.28
	2800	1648	25	0.1	23	73.4	13.10	44.70	8.51	29.05	14.89	50.79	9.97	34.03	15.33	52.32	7.67	26.16
					24	75.2	13.23	45.15	9.40	32.06	15.04	51.31	10.38	35.40	15.49	52.85	8.52	29.07
					27	80.6	13.37	45.61	9.62	32.84	15.19	51.83	10.94	37.32	15.65	53.38	9.39	32.03
					31	87.8	13.50	46.06	9.99	34.09	15.34	52.35	11.35	38.74	15.80	53.92	10.27	35.05
	2600	1530	50	0.2	23	73.4	11.98	40.89	7.79	26.58	13.62	46.47	8.58	29.28	14.03	47.86	7.01	23.93
					24	75.2	12.11	41.31	8.60	29.33	13.76	46.94	9.08	30.98	14.17	48.35	7.79	26.59
					27	80.6	12.23	41.73	8.81	30.04	13.90	47.42	9.59	32.72	14.31	48.84	8.59	29.30
					31	87.8	12.35	42.14	9.14	31.19	14.04	47.89	9.97	34.00	14.46	49.33	9.40	32.06

Fan speed	Air Flow Rate		ESP		Entering Air DBT		Outdoor Air Dry Bulb Temperature 109 ℉ (43℃)											
							Indoor Air Wet Bulb Temperature ℉ (℃)											
							62 ℉ (17℃)				67 ℉ (19℃)				72 ℉ (22℃)			
							Total Capacity		Sensible Capacity		Total Capacity		Sensible Capacity		Total Capacity		Sensible Capacity	
	m^3/h	cfm	Pa	in.wg	℃	℉	kW	KBtu /h	kW	KBtu /h	kW	KBtu /h	kW	KBtu /h	kW	KBtu /h	kW	KBtu /h
Hight Speed	3550	2089	0	0	23	73.4	12.47	42.54	9.35	31.91	14.17	48.35	9.92	33.84	14.59	49.80	7.88	26.89
					24	75.2	12.60	42.98	10.08	34.38	14.31	48.84	10.45	35.65	14.74	50.30	8.70	29.68
					27	80.6	12.72	43.41	10.31	35.16	14.46	49.33	10.99	37.49	14.89	50.81	9.68	33.03
					31	87.8	12.85	43.85	10.79	36.83	14.60	49.83	11.54	39.36	15.04	51.32	10.53	35.92
	3350	1972	25	0.1	23	73.4	10.54	35.96	7.90	26.97	11.98	40.86	8.02	27.38	12.33	42.08	6.66	22.73
					24	75.2	11.86	40.45	9.48	32.36	13.47	45.97	9.30	31.72	13.88	47.35	8.19	27.93
					27	80.6	11.98	40.86	9.70	33.10	13.61	46.43	9.80	33.43	14.02	47.82	9.11	31.09
					31	87.8	12.09	41.27	10.16	34.66	13.74	46.89	10.17	34.70	14.16	48.30	9.91	33.81
	3150	1854	50	0.2	23	73.4	11.15	38.04	8.36	28.53	12.67	43.23	7.98	27.23	13.05	44.52	7.05	24.04
					24	75.2	11.26	38.43	9.01	30.74	12.80	43.67	8.45	28.82	13.18	44.98	7.78	26.54
					27	80.6	11.38	38.82	9.21	31.44	12.93	44.11	8.92	30.44	13.32	45.43	8.66	29.53
					31	87.8	11.49	39.20	9.65	32.93	13.06	44.55	9.27	31.63	13.45	45.89	9.41	32.12
Mid Speed	3300	1942	0	0	23	73.4	12.22	41.69	9.16	31.27	13.89	47.38	9.72	33.17	14.30	48.80	7.72	26.35
					24	75.2	12.34	42.12	9.88	33.70	14.03	47.86	10.24	34.94	14.45	49.30	8.52	29.09
					27	80.6	12.47	42.54	10.10	34.46	14.17	48.35	10.77	36.74	14.59	49.80	9.49	32.37
					31	87.8	12.59	42.97	10.58	36.09	14.31	48.83	11.31	38.58	14.74	50.29	10.32	35.21
	3100	1825	25	0.1	23	73.4	10.33	35.24	7.75	26.43	11.74	40.04	7.86	26.83	12.09	41.24	6.53	22.27
					24	75.2	11.62	39.64	9.29	31.71	13.20	45.05	9.11	31.08	13.60	46.40	8.02	27.37
					27	80.6	11.74	40.04	9.51	32.43	13.34	45.50	9.60	32.76	13.74	46.87	8.93	30.46
					31	87.8	11.85	40.44	9.96	33.97	13.47	45.96	9.97	34.01	13.87	47.34	9.71	33.13
	2900	1707	50	0.2	23	73.4	10.93	37.28	8.19	27.96	12.42	42.36	7.82	26.69	12.79	43.63	6.91	23.56
					24	75.2	11.04	37.66	8.83	30.13	12.54	42.79	8.28	28.24	12.92	44.08	7.62	26.01
					27	80.6	11.15	38.04	9.03	30.81	12.67	43.23	8.74	29.83	13.05	44.52	8.48	28.94
					31	87.8	11.26	38.42	9.46	32.27	12.80	43.66	9.08	31.00	13.18	44.97	9.23	31.48
Low Speed	3000	1766	0	0	23	73.4	11.85	40.42	7.70	26.27	13.46	45.93	9.42	32.15	13.86	47.31	6.93	23.65
					24	75.2	11.97	40.83	8.50	28.99	13.60	46.40	9.93	33.87	14.01	47.79	7.70	26.28
					27	80.6	12.09	41.24	8.70	29.69	13.74	46.87	10.44	35.62	14.15	48.27	8.49	28.96
					31	87.8	12.21	41.65	9.03	30.82	13.87	47.33	10.96	37.39	14.29	48.75	9.29	31.69
	2800	1648	25	0.1	23	73.4	10.01	34.16	6.51	22.20	11.38	38.82	7.62	26.01	11.72	39.98	5.86	19.99
					24	75.2	11.26	38.43	8.00	27.28	12.80	43.67	8.83	30.13	13.18	44.98	7.25	24.74
					27	80.6	11.38	38.82	8.19	27.95	12.93	44.11	9.31	31.76	13.32	45.43	7.99	27.26
					31	87.8	11.49	39.20	8.50	29.01	13.06	44.55	9.66	32.97	13.45	45.89	8.74	29.83
	2600	1530	50	0.2	23	73.4	10.59	36.14	6.88	23.49	12.04	41.07	7.58	25.87	12.40	42.30	6.20	21.15
					24	75.2	10.70	36.51	7.60	25.92	12.16	41.48	8.02	27.38	12.52	42.73	6.89	23.50
					27	80.6	10.81	36.88	7.78	26.55	12.28	41.90	8.47	28.91	12.65	43.16	7.59	25.90
					31	87.8	10.92	37.24	8.08	27.56	12.40	42.32	8.81	30.05	12.78	43.59	8.30	28.33

Fan speed	Air Flow Rate		ESP		Entering Air DBT		Outdoor Air Dry Bulb Temperature 118 ℉ (48℃)											
							Indoor Air Wet Bulb Temperature ℉ (℃)											
							62 ℉ (17℃)				67 ℉ (19℃)				72 ℉ (22℃)			
							Total Capacity		Sensible Capacity		Total Capacity		Sensible Capacity		Total Capacity		Sensible Capacity	
	m^3/h	cfm	Pa	in.wg	℃	℉	kW	KBtu /h	kW	KBtu /h	kW	KBtu /h	kW	KBtu /h	kW	KBtu /h	kW	KBtu /h
Hight Speed	3550	2089	0	0	23	73.4	12.18	41.54	9.13	31.16	13.84	47.21	9.69	33.05	14.25	48.62	7.70	26.26
					24	75.2	12.30	41.97	9.84	33.57	13.98	47.69	10.20	34.81	14.40	49.12	8.49	28.98
					27	80.6	12.42	42.39	10.06	34.34	14.12	48.17	10.73	36.61	14.54	49.62	9.45	32.25
					31	87.8	12.55	42.81	10.54	35.96	14.26	48.65	11.26	38.44	14.69	50.11	10.28	35.08
	3350	1972	25	0.1	23	73.4	9.88	33.71	7.41	25.28	11.23	38.31	7.52	25.66	11.56	39.45	6.24	21.31
					24	75.2	11.11	37.92	8.89	30.34	12.63	43.09	8.71	29.73	13.01	44.39	7.68	26.19
					27	80.6	11.23	38.31	9.09	31.03	12.76	43.53	9.19	31.34	13.14	44.83	8.54	29.14
					31	87.8	11.34	38.69	9.52	32.50	12.89	43.96	9.53	32.53	13.27	45.28	9.29	31.70
	3150	1854	50	0.2	23	73.4	10.42	35.54	7.81	26.65	11.84	40.38	7.46	25.44	12.19	41.59	6.58	22.46
					24	75.2	10.52	35.90	8.42	28.72	11.96	40.79	7.89	26.92	12.32	42.02	7.27	24.79
					27	80.6	10.63	36.26	8.61	29.37	12.08	41.21	8.33	28.43	12.44	42.44	8.09	27.59
					31	87.8	10.73	36.62	9.02	30.76	12.20	41.62	8.66	29.55	12.56	42.87	8.79	30.01
Mid Speed	3300	1942	0	0	23	73.4	11.93	40.71	8.95	30.53	13.56	46.26	9.49	32.38	13.97	47.65	7.54	25.73
					24	75.2	12.05	41.13	9.64	32.90	13.70	46.74	10.00	34.12	14.11	48.14	8.32	28.40
					27	80.6	12.18	41.54	9.86	33.65	13.84	47.21	10.52	35.88	14.25	48.62	9.26	31.61
					31	87.8	12.30	41.96	10.33	35.25	13.97	47.68	11.04	37.67	14.39	49.11	10.08	34.38
	3100	1825	25	0.1	23	73.4	9.68	33.03	7.26	24.78	11.00	37.54	7.37	25.15	11.33	38.67	6.12	20.88
					24	75.2	10.89	37.16	8.71	29.73	12.38	42.23	8.54	29.14	12.75	43.50	7.52	25.66
					27	80.6	11.00	37.54	8.91	30.41	12.50	42.66	9.00	30.71	12.88	43.94	8.37	28.56
					31	87.8	11.11	37.91	9.33	31.85	12.63	43.08	9.34	31.88	13.01	44.38	9.10	31.06
	2900	1707	50	0.2	23	73.4	10.21	34.83	7.66	26.12	11.60	39.58	7.31	24.93	11.95	40.76	6.45	22.01
					24	75.2	10.31	35.18	8.25	28.15	11.72	39.98	7.73	26.39	12.07	41.18	7.12	24.30
					27	80.6	10.42	35.54	8.44	28.78	11.84	40.38	8.17	27.86	12.19	41.59	7.92	27.04
					31	87.8	10.52	35.89	8.84	30.15	11.95	40.79	8.49	28.96	12.31	42.01	8.62	29.41
Low Speed	3000	1766	0	0	23	73.4	11.57	39.47	7.52	25.65	13.14	44.85	9.20	31.39	13.54	46.19	6.77	23.10
					24	75.2	11.68	39.87	8.30	28.31	13.28	45.31	9.69	33.07	13.68	46.66	7.52	25.67
					27	80.6	11.80	40.27	8.50	29.00	13.41	45.76	10.19	34.78	13.81	47.14	8.29	28.28
					31	87.8	11.92	40.67	8.82	30.10	13.55	46.22	10.70	36.51	13.95	47.61	9.07	30.94
	2800	1648	25	0.1	23	73.4	9.39	32.02	6.10	20.82	10.67	36.39	7.15	24.38	10.99	37.48	5.49	18.74
					24	75.2	10.56	36.03	7.50	25.58	12.00	40.94	8.28	28.25	12.36	42.17	6.80	23.19
					27	80.6	10.67	36.39	7.68	26.20	12.12	41.35	8.73	29.77	12.48	42.59	7.49	25.56
					31	87.8	10.77	36.75	7.97	27.20	12.24	41.77	9.06	30.91	12.61	43.02	8.20	27.96
	2600	1530	50	0.2	23	73.4	9.89	33.76	6.43	21.94	11.24	38.36	7.08	24.17	11.58	39.51	5.79	19.76
					24	75.2	10.00	34.10	7.10	24.21	11.36	38.76	7.50	25.58	11.70	39.92	6.43	21.95
					27	80.6	10.10	34.45	7.27	24.80	11.47	39.15	7.92	27.01	11.82	40.32	7.09	24.19
					31	87.8	10.20	34.79	7.55	25.75	11.59	39.54	8.23	28.07	11.94	40.72	7.76	26.47

(2) Cassette type

GKH18KCI

Fan Speed	Air Flow Rate		ESP		Entering Air DBT		Outdoor Air Dry Bulb Temperature 95 ℉ (35℃)											
							Indoor Air Wet Bulb Temperature ℉ (℃)											
							62 ℉ (17℃)				67 ℉ (19℃)				72 ℉ (22℃)			
							Total Capacity		Sensible Capacity		Total Capacity		Sensible Capacity		Total Capacity		Sensible Capacity	
	m^3/h	cfm	Pa	in.wg	℃	℉	kW	KBtu/h	kW	KBtu/h	kW	KBtu/h	kW	KBtu/h	kW	KBtu/h	kW	KBtu/h
High	1180	695	0	0	23	73.4	4.59	15.65	3.44	11.74	5.21	17.79	3.65	12.45	5.37	18.32	2.90	9.89
					24	75.2	4.63	15.81	3.71	12.65	5.27	17.97	3.84	13.12	5.42	18.51	3.20	10.92
					27	80.6	4.68	15.97	3.79	12.94	5.32	18.15	4.04	13.80	5.48	18.70	3.56	12.15
					31	87.8	4.73	16.13	3.97	13.55	5.37	18.33	4.24	14.48	5.53	18.88	3.87	13.22
Medium	1080	636	0	0	23	73.4	4.50	15.34	3.37	11.51	5.11	17.43	3.58	12.20	5.26	17.96	2.84	9.70
					24	75.2	4.54	15.50	3.63	12.40	5.16	17.61	3.77	12.86	5.32	18.14	3.14	10.70
					27	80.6	4.59	15.65	3.72	12.68	5.21	17.79	3.96	13.52	5.37	18.32	3.49	11.91
					31	87.8	4.63	15.81	3.89	13.28	5.27	17.97	4.16	14.19	5.42	18.51	3.80	12.95
Low	1000	589	0	0	23	73.4	4.36	14.87	2.83	9.67	4.95	16.90	3.47	11.83	5.10	17.41	2.55	8.70
					24	75.2	4.40	15.02	3.13	10.67	5.00	17.07	3.65	12.46	5.15	17.58	2.83	9.67
					27	80.6	4.45	15.17	3.20	10.93	5.05	17.24	3.84	13.11	5.21	17.76	3.12	10.66
					31	87.8	4.49	15.33	3.32	11.34	5.10	17.42	4.03	13.76	5.26	17.94	3.42	11.66

Fan Speed	Air Flow Rate		ESP		Entering Air DBT		Outdoor Air Dry Bulb Temperature 109 ℉ (43℃)											
							Indoor Air Wet Bulb Temperature ℉ (℃)											
							62 ℉ (17℃)				67 ℉ (19℃)				72 ℉ (22℃)			
							Total Capacity		Sensible Capacity		Total Capacity		Sensible Capacity		Total Capacity		Sensible Capacity	
	m^3/h	cfm	Pa	in.wg	℃	℉	kW	KBtu/h	kW	KBtu/h	kW	KBtu/h	kW	KBtu/h	kW	KBtu/h	kW	KBtu/h
High	1180	695	0	0	23	73.4	3.90	13.31	2.92	9.98	4.43	15.12	3.10	10.58	4.56	15.57	2.46	8.41
					24	75.2	3.94	13.44	3.15	10.75	4.48	15.27	3.27	11.15	4.61	15.73	2.72	9.28
					27	80.6	3.98	13.58	3.22	11.00	4.52	15.43	3.44	11.73	4.66	15.89	3.03	10.33
					31	87.8	4.02	13.71	3.38	11.52	4.57	15.58	3.61	12.31	4.70	16.05	3.29	11.24
Medium	1080	636	0	0	23	73.4	3.82	13.04	2.87	9.78	4.34	14.82	3.04	10.37	4.47	15.26	2.42	8.24
					24	75.2	3.86	13.17	3.09	10.54	4.39	14.97	3.20	10.93	4.52	15.42	2.67	9.10
					27	80.6	3.90	13.31	3.16	10.78	4.43	15.12	3.37	11.49	4.56	15.57	2.97	10.12
					31	87.8	3.94	13.44	3.31	11.29	4.48	15.27	3.54	12.06	4.61	15.73	3.23	11.01
Low	1000	589	0	0	23	73.4	3.70	12.64	2.41	8.22	4.21	14.36	2.95	10.06	4.34	14.80	2.17	7.40
					24	75.2	3.74	12.77	2.66	9.07	4.25	14.51	3.10	10.59	4.38	14.95	2.41	8.22
					27	80.6	3.78	12.90	2.72	9.29	4.30	14.66	3.26	11.14	4.42	15.10	2.65	9.06
					31	87.8	3.82	13.03	2.83	9.64	4.34	14.80	3.43	11.70	4.47	15.25	2.90	9.91

Fan Speed	Air Flow Rate		ESP		Entering Air DBT		Outdoor Air Dry Bulb Temperature 118 ℉ (48℃)											
							Indoor Air Wet Bulb Temperature ℉ (℃)											
							62 ℉ (17℃)				67 ℉ (19℃)				72 ℉ (22℃)			
							Total Capacity		Sensible Capacity		Total Capacity		Sensible Capacity		Total Capacity		Sensible Capacity	
	m^3/h	cfm	Pa	in.wg	℃	℉	kW	KBtu/h	kW	KBtu/h	kW	KBtu/h	kW	KBtu/h	kW	KBtu/h	kW	KBtu/h
High	1180	695	0	0	23	73.4	3.81	12.99	2.86	9.74	4.33	14.76	3.03	10.34	4.46	15.21	2.41	8.21
					24	75.2	3.85	13.13	3.08	10.50	4.37	14.92	3.19	10.89	4.50	15.36	2.66	9.06
					27	80.6	3.89	13.26	3.15	10.74	4.42	15.07	3.36	11.45	4.55	15.52	2.96	10.09
					31	87.8	3.92	13.39	3.30	11.25	4.46	15.22	3.52	12.02	4.59	15.67	3.22	10.97
Medium	1080	636	0	0	23	73.4	3.73	12.73	2.80	9.55	4.24	14.47	2.97	10.13	4.37	14.90	2.36	8.05
					24	75.2	3.77	12.86	3.02	10.29	4.28	14.62	3.13	10.67	4.41	15.06	2.60	8.88
					27	80.6	3.81	12.99	3.08	10.52	4.33	14.76	3.29	11.22	4.46	15.21	2.90	9.88
					31	87.8	3.85	13.12	3.23	11.02	4.37	14.91	3.45	11.78	4.50	15.36	3.15	10.75
Low	1000	589	0	0	23	73.4	3.62	12.34	2.35	8.02	4.11	14.03	2.88	9.82	4.23	14.45	2.12	7.22
					24	75.2	3.65	12.47	2.59	8.85	4.15	14.17	3.03	10.34	4.28	14.59	2.35	8.03
					27	80.6	3.69	12.60	2.66	9.07	4.19	14.31	3.19	10.88	4.32	14.74	2.59	8.85
					31	87.8	3.73	12.72	2.76	9.41	4.24	14.46	3.35	11.42	4.36	14.89	2.84	9.68

GKH24K3CI

Fan Speed	Air Flow Rate		ESP		Entering Air DBT		Outdoor Air Dry Bulb Temperature 95 ℉ (35℃)											
							Indoor Air Wet Bulb Temperature ℉ (℃)											
							62 ℉ (17℃)				67 ℉ (19℃)				72 ℉ (22℃)			
							Total Capacity		Sensible Capacity		Total Capacity		Sensible Capacity		Total Capacity		Sensible Capacity	
	m^3/h	cfm	Pa	in.wg	℃	℉	kW	KBtu /h	kW	KBtu /h	kW	KBtu /h	kW	KBtu /h	kW	KBtu /h	kW	KBtu /h
High	1400	824	0	0	23	73.4	6.05	20.63	4.53	15.47	6.87	23.44	4.81	16.41	7.08	24.14	3.82	13.04
					24	75.2	6.11	20.84	4.89	16.67	6.94	23.68	5.07	17.29	7.15	24.39	4.22	14.39
					27	80.6	6.17	21.05	5.00	17.05	7.01	23.92	5.33	18.18	7.22	24.64	4.69	16.01
					31	87.8	6.23	21.26	5.23	17.86	7.08	24.16	5.59	19.08	7.29	24.88	5.10	17.42
Medium	1270	747	0	0	23	73.4	5.92	20.21	4.44	15.16	6.73	22.97	4.71	16.08	6.93	23.66	3.74	12.78
					24	75.2	5.98	20.42	4.79	16.34	6.80	23.21	4.96	16.94	7.01	23.90	4.13	14.10
					27	80.6	6.05	20.63	4.90	16.71	6.87	23.44	5.22	17.81	7.08	24.14	4.60	15.69
					31	87.8	6.11	20.83	5.13	17.50	6.94	23.67	5.48	18.70	7.15	24.38	5.00	17.07
Low	1170	689	0	0	23	73.4	5.74	19.60	3.73	12.74	6.53	22.27	4.57	15.59	6.72	22.94	3.36	11.47
					24	75.2	5.80	19.80	4.12	14.05	6.59	22.49	4.81	16.42	6.79	23.17	3.73	12.74
					27	80.6	5.86	20.00	4.22	14.40	6.66	22.72	5.06	17.27	6.86	23.40	4.12	14.04
					31	87.8	5.92	20.20	4.38	14.94	6.73	22.95	5.31	18.13	6.93	23.64	4.50	15.36

Fan Speed	Air Flow Rate		ESP		Entering Air DBT		Outdoor Air Dry Bulb Temperature 109 ℉ (43℃)											
							Indoor Air Wet Bulb Temperature ℉ (℃)											
							62 ℉ (17℃)				67 ℉ (19℃)				72 ℉ (22℃)			
							Total Capacity		Sensible Capacity		Total Capacity		Sensible Capacity		Total Capacity		Sensible Capacity	
	m^3/h	cfm	Pa	in.wg	℃	℉	kW	KBtu /h	kW	KBtu /h	kW	KBtu /h	kW	KBtu /h	kW	KBtu /h	kW	KBtu /h
High	1400	824	0	0	23	73.4	5.14	17.53	3.85	13.15	5.84	19.92	4.09	13.95	6.01	20.52	3.25	11.08
					24	75.2	5.19	17.71	4.15	14.17	5.90	20.13	4.31	14.69	6.08	20.73	3.58	12.23
					27	80.6	5.24	17.89	4.25	14.49	5.96	20.33	4.53	15.45	6.14	20.94	3.99	13.61
					31	87.8	5.30	18.07	4.45	15.18	6.02	20.53	4.75	16.22	6.20	21.15	4.34	14.80
Medium	1270	747	0	0	23	73.4	5.04	17.18	3.78	12.89	5.72	19.53	4.01	13.67	5.89	20.11	3.18	10.86
					24	75.2	5.09	17.36	4.07	13.89	5.78	19.72	4.22	14.40	5.95	20.32	3.51	11.99
					27	80.6	5.14	17.53	4.16	14.20	5.84	19.92	4.44	15.14	6.01	20.52	3.91	13.34
					31	87.8	5.19	17.71	4.36	14.87	5.90	20.12	4.66	15.90	6.07	20.73	4.25	14.51
Low	1170	689	0	0	23	73.4	4.88	16.66	3.17	10.83	5.55	18.93	3.88	13.25	5.71	19.50	2.86	9.75
					24	75.2	4.93	16.83	3.50	11.95	5.60	19.12	4.09	13.96	5.77	19.69	3.17	10.83
					27	80.6	4.98	17.00	3.59	12.24	5.66	19.31	4.30	14.68	5.83	19.89	3.50	11.94
					31	87.8	5.03	17.17	3.72	12.70	5.72	19.51	4.52	15.41	5.89	20.09	3.83	13.06

Fan Speed	Air Flow Rate		ESP		Entering Air DBT		Outdoor Air Dry Bulb Temperature 118 ℉ (48℃)											
							Indoor Air Wet Bulb Temperature ℉ (℃)											
							62 ℉ (17℃)				67 ℉ (19℃)				72 ℉ (22℃)			
							Total Capacity		Sensible Capacity		Total Capacity		Sensible Capacity		Total Capacity		Sensible Capacity	
	m^3/h	cfm	Pa	in.wg	℃	℉	kW	KBtu /h	kW	KBtu /h	kW	KBtu /h	kW	KBtu /h	kW	KBtu /h	kW	KBtu /h
High	1400	824	0	0	23	73.4	5.02	17.12	3.76	12.84	5.70	19.45	3.99	13.62	5.87	20.04	3.17	10.82
					24	75.2	5.07	17.30	4.06	13.84	5.76	19.65	4.20	14.35	5.93	20.24	3.50	11.94
					27	80.6	5.12	17.47	4.15	14.15	5.82	19.85	4.42	15.09	5.99	20.45	3.90	13.29
					31	87.8	5.17	17.64	4.34	14.82	5.88	20.05	4.64	15.84	6.05	20.65	4.24	14.46
Medium	1270	747	0	0	23	73.4	4.92	16.78	3.69	12.58	5.59	19.07	3.91	13.35	5.76	19.64	3.11	10.60
					24	75.2	4.97	16.95	3.97	13.56	5.64	19.26	4.12	14.06	5.81	19.84	3.43	11.70
					27	80.6	5.02	17.12	4.06	13.87	5.70	19.45	4.33	14.79	5.87	20.04	3.82	13.03
					31	87.8	5.07	17.29	4.26	14.52	5.76	19.65	4.55	15.52	5.93	20.24	4.15	14.17
Low	1170	689	0	0	23	73.4	4.77	16.26	3.10	10.57	5.42	18.48	3.79	12.94	5.58	19.04	2.79	9.52
					24	75.2	4.82	16.43	3.42	11.67	5.47	18.67	3.99	13.63	5.64	19.23	3.10	10.58
					27	80.6	4.86	16.60	3.50	11.95	5.53	18.86	4.20	14.33	5.69	19.43	3.42	11.66
					31	87.8	4.91	16.76	3.64	12.40	5.58	19.05	4.41	15.05	5.75	19.62	3.74	12.75

GKH30K3CI

Fan Speed	Air Flow Rate		ESP		Entering Air DBT		Outdoor Air Dry Bulb Temperature95 ℉ (35℃)											
							Indoor Air Wet Bulb Temperature ℉ (℃)											
							62 ℉ (17℃)				67 ℉ (19℃)				72 ℉ (22℃)			
							Total Capacity		Sensible Capacity		Total Capacity		Sensible Capacity		Total Capacity		Sensible Capacity	
	m^3/h	cfm	Pa	in.wg	℃	℉	kW	KBtu /h	kW	KBtu /h	kW	KBtu /h	kW	KBtu /h	kW	KBtu /h	kW	KBtu /h
High	1660	977	0	0	23	73.4	7.61	25.95	5.70	19.46	8.64	29.49	6.05	20.64	8.90	30.38	4.81	16.40
					24	75.2	7.68	26.22	6.15	20.97	8.73	29.79	6.37	21.75	8.99	30.69	5.31	18.11
					27	80.6	7.76	26.48	6.29	21.45	8.82	30.09	6.70	22.87	9.08	31.00	5.90	20.15
					31	87.8	7.84	26.75	6.58	22.47	8.91	30.39	7.04	24.01	9.18	31.31	6.42	21.91
Medium	1570	924	0	0	23	73.4	7.45	25.43	5.59	19.08	8.47	28.90	5.93	20.23	8.72	29.77	4.71	16.08
					24	75.2	7.53	25.69	6.02	20.55	8.56	29.20	6.25	21.31	8.81	30.07	5.20	17.74
					27	80.6	7.61	25.95	6.16	21.02	8.64	29.49	6.57	22.41	8.90	30.38	5.79	19.74
					31	87.8	7.68	26.21	6.45	22.02	8.73	29.79	6.90	23.53	8.99	30.68	6.29	21.48
Low	1500	883	0	0	23	73.4	7.23	24.66	4.70	16.03	8.21	28.02	5.75	19.61	8.46	28.86	4.23	14.43
					24	75.2	7.30	24.91	5.18	17.68	8.30	28.30	6.06	20.66	8.54	29.15	4.70	16.03
					27	80.6	7.37	25.16	5.31	18.11	8.38	28.59	6.37	21.73	8.63	29.45	5.18	17.67
					31	87.8	7.45	25.41	5.51	18.80	8.46	28.88	6.69	22.81	8.72	29.74	5.67	19.33

Fan Speed	Air Flow Rate		ESP		Entering Air DBT		Outdoor Air Dry Bulb Temperature 109 ℉ (43℃)											
							Indoor Air Wet Bulb Temperature ℉ (℃)											
							62 ℉ (17℃)				67 ℉ (19℃)				72 ℉ (22℃)			
							Total Capacity		Sensible Capacity		Total Capacity		Sensible Capacity		Total Capacity		Sensible Capacity	
	m^3/h	cfm	Pa	in.wg	℃	℉	kW	KBtu /h	kW	KBtu /h	kW	KBtu /h	kW	KBtu /h	kW	KBtu /h	kW	KBtu /h
High	1660	977	0	0	23	73.4	6.47	22.06	4.85	16.54	7.35	25.07	5.14	17.55	7.57	25.82	4.09	13.94
					24	75.2	6.53	22.29	5.23	17.83	7.42	25.32	5.42	18.49	7.64	26.08	4.51	15.39
					27	80.6	6.60	22.51	5.34	18.23	7.50	25.58	5.70	19.44	7.72	26.35	5.02	17.13
					31	87.8	6.66	22.74	5.60	19.10	7.57	25.84	5.98	20.41	7.80	26.61	5.46	18.63
Medium	1570	924	0	0	23	73.4	6.34	21.62	4.75	16.21	7.20	24.57	5.04	17.20	7.42	25.30	4.00	13.66
					24	75.2	6.40	21.84	5.12	17.47	7.27	24.82	5.31	18.12	7.49	25.56	4.42	15.08
					27	80.6	6.47	22.06	5.24	17.87	7.35	25.07	5.58	19.05	7.57	25.82	4.92	16.78
					31	87.8	6.53	22.28	5.49	18.72	7.42	25.32	5.86	20.00	7.64	26.08	5.35	18.25
Low	1500	883	0	0	23	73.4	6.14	20.96	3.99	13.62	6.98	23.81	4.89	16.67	7.19	24.53	3.59	12.26
					24	75.2	6.20	21.17	4.41	15.03	7.05	24.06	5.15	17.56	7.26	24.78	3.99	13.63
					27	80.6	6.27	21.38	4.51	15.40	7.12	24.30	5.41	18.47	7.34	25.03	4.40	15.02
					31	87.8	6.33	21.60	4.68	15.98	7.19	24.54	5.68	19.39	7.41	25.28	4.82	16.43

Fan Speed	Air Flow Rate		ESP		Entering Air DBT		Outdoor Air Dry Bulb Temperature 118 ℉ (48℃)											
							Indoor Air Wet Bulb Temperature ℉ (℃)											
							62 ℉ (17℃)				67 ℉ (19℃)				72 ℉ (22℃)			
							Total Capacity		Sensible Capacity		Total Capacity		Sensible Capacity		Total Capacity		Sensible Capacity	
	m^3/h	cfm	Pa	in.wg	℃	℉	kW	KBtu /h	kW	KBtu /h	kW	KBtu /h	kW	KBtu /h	kW	KBtu /h	kW	KBtu /h
High	1660	977	0	0	23	73.4	6.31	21.54	4.73	16.16	7.17	24.48	5.02	17.13	7.39	25.21	3.99	13.61
					24	75.2	6.38	21.76	5.10	17.41	7.25	24.73	5.29	18.05	7.46	25.47	4.40	15.03
					27	80.6	6.44	21.98	5.22	17.80	7.32	24.98	5.56	18.98	7.54	25.73	4.90	16.72
					31	87.8	6.51	22.20	5.47	18.65	7.39	25.23	5.84	19.93	7.62	25.98	5.33	18.19
Medium	1570	924	0	0	23	73.4	6.19	21.11	4.64	15.83	7.03	23.99	4.92	16.79	7.24	24.71	3.91	13.34
					24	75.2	6.25	21.33	5.00	17.06	7.10	24.23	5.18	17.69	7.32	24.96	4.32	14.73
					27	80.6	6.31	21.54	5.11	17.45	7.17	24.48	5.45	18.60	7.39	25.21	4.80	16.39
					31	87.8	6.38	21.76	5.36	18.28	7.25	24.72	5.72	19.53	7.46	25.46	5.22	17.83
Low	1500	883	0	0	23	73.4	6.00	20.46	3.90	13.30	6.82	23.25	4.77	16.28	7.02	23.95	3.51	11.98
					24	75.2	6.06	20.67	4.30	14.68	6.89	23.49	5.03	17.15	7.09	24.20	3.90	13.31
					27	80.6	6.12	20.88	4.41	15.03	6.95	23.73	5.29	18.03	7.16	24.44	4.30	14.66
					31	87.8	6.18	21.09	4.57	15.61	7.02	23.97	5.55	18.93	7.23	24.69	4.70	16.05

GKH36K3CI

Fan Speed	Air Flow Rate		ESP		Entering Air DBT		Outdoor Air Dry Bulb Temperature 95 ℉ (35℃)											
							Indoor Air Wet Bulb Temperature ℉ (℃)											
							62 ℉ (17℃)				67 ℉ (19℃)				72 ℉ (22℃)			
							Total Capacity		Sensible Capacity		Total Capacity		Sensible Capacity		Total Capacity		Sensible Capacity	
	m^3/h	cfm	Pa	in.wg	℃	℉	kW	KBtu /h	kW	KBtu /h	kW	KBtu /h	kW	KBtu /h	kW	KBtu /h	kW	KBtu /h
High	1660	977	0	0	23	73.4	8.88	30.31	6.66	22.73	10.09	34.44	7.07	24.11	10.40	35.47	5.61	19.16
					24	75.2	8.97	30.62	7.18	24.49	10.20	34.79	7.44	25.40	10.50	35.84	6.20	21.14
					27	80.6	9.06	30.93	7.34	25.05	10.30	35.14	7.83	26.71	10.61	36.20	6.90	23.53
					31	87.8	9.15	31.24	7.69	26.24	10.40	35.50	8.22	28.04	10.72	36.56	7.50	25.59
Medium	1570	924	0	0	23	73.4	8.71	29.70	6.53	22.28	9.89	33.75	6.92	23.63	10.19	34.76	5.50	18.77
					24	75.2	8.79	30.00	7.04	24.00	9.99	34.10	7.29	24.89	10.29	35.12	6.07	20.72
					27	80.6	8.88	30.31	7.20	24.55	10.09	34.44	7.67	26.17	10.40	35.47	6.76	23.06
					31	87.8	8.97	30.61	7.54	25.71	10.19	34.79	8.05	27.48	10.50	35.83	7.35	25.08
Low	1500	883	0	0	23	73.4	8.44	28.79	5.49	18.72	9.59	32.72	6.71	22.90	9.88	33.70	4.94	16.85
					24	75.2	8.52	29.09	6.05	20.65	9.69	33.05	7.07	24.13	9.98	34.04	5.49	18.72
					27	80.6	8.61	29.38	6.20	21.15	9.79	33.39	7.44	25.37	10.08	34.39	6.05	20.63
					31	87.8	8.70	29.67	6.44	21.96	9.88	33.72	7.81	26.64	10.18	34.73	6.62	22.58

Fan Speed	Air Flow Rate		ESP		Entering Air DBT		Outdoor Air Dry Bulb Temperature 109 ℉ (43℃)											
							Indoor Air Wet Bulb Temperature ℉ (℃)											
							62 ℉ (17℃)				67 ℉ (19℃)				72 ℉ (22℃)			
							Total Capacity		Sensible Capacity		Total Capacity		Sensible Capacity		Total Capacity		Sensible Capacity	
	m^3/h	cfm	Pa	in.wg	℃	℉	kW	KBtu /h	kW	KBtu /h	kW	KBtu /h	kW	KBtu /h	kW	KBtu /h	kW	KBtu /h
High	1660	977	0	0	23	73.4	7.55	25.76	5.66	19.32	8.58	29.27	6.01	20.49	8.84	30.15	4.77	16.28
					24	75.2	7.63	26.02	6.10	20.82	8.67	29.57	6.33	21.59	8.93	30.46	5.27	17.97
					27	80.6	7.70	26.29	6.24	21.29	8.76	29.87	6.65	22.70	9.02	30.77	5.86	20.00
					31	87.8	7.78	26.55	6.54	22.30	8.84	30.17	6.99	23.83	9.11	31.08	6.38	21.75
Medium	1570	924	0	0	23	73.4	7.40	25.25	5.55	18.93	8.41	28.69	5.89	20.08	8.66	29.55	4.68	15.96
					24	75.2	7.47	25.50	5.98	20.40	8.49	28.98	6.20	21.16	8.75	29.85	5.16	17.61
					27	80.6	7.55	25.76	6.12	20.87	8.58	29.27	6.52	22.25	8.84	30.15	5.74	19.60
					31	87.8	7.63	26.02	6.41	21.86	8.67	29.57	6.85	23.36	8.93	30.45	6.25	21.32
Low	1500	883	0	0	23	73.4	7.17	24.47	4.66	15.91	8.15	27.81	5.71	19.47	8.40	28.65	4.20	14.32
					24	75.2	7.25	24.72	5.14	17.55	8.23	28.09	6.01	20.51	8.48	28.94	4.66	15.92
					27	80.6	7.32	24.97	5.27	17.98	8.32	28.38	6.32	21.57	8.57	29.23	5.14	17.54
					31	87.8	7.39	25.22	5.47	18.66	8.40	28.66	6.64	22.64	8.65	29.52	5.62	19.19

Fan Speed	Air Flow Rate		ESP		Entering Air DBT		Outdoor Air Dry Bulb Temperature 118 ℉ (48℃)											
							Indoor Air Wet Bulb Temperature ℉ (℃)											
							62 ℉ (17℃)				67 ℉ (19℃)				72 ℉ (22℃)			
							Total Capacity		Sensible Capacity		Total Capacity		Sensible Capacity		Total Capacity		Sensible Capacity	
	m^3/h	cfm	Pa	in.wg	kW	KBtu /h	kW	KBtu /h	kW	KBtu /h	kW	KBtu /h	kW	KBtu /h	kW	KBtu /h	kW	Mbh
High	1660	977	0	0	23	73.4	7.37	25.16	5.53	18.87	8.38	28.59	5.86	20.01	8.63	29.44	4.66	15.90
					24	75.2	7.45	25.41	5.96	20.33	8.46	28.88	6.18	21.08	8.72	29.74	5.14	17.55
					27	80.6	7.52	25.67	6.09	20.79	8.55	29.17	6.50	22.17	8.81	30.04	5.72	19.53
					31	87.8	7.60	25.93	6.38	21.78	8.63	29.46	6.82	23.27	8.89	30.34	6.23	21.24
Medium	1570	924	0	0	23	73.4	7.23	24.65	5.42	18.49	8.21	28.01	5.75	19.61	8.46	28.85	4.57	15.58
					24	75.2	7.30	24.90	5.84	19.92	8.29	28.30	6.05	20.66	8.54	29.15	5.04	17.20
					27	80.6	7.37	25.16	5.97	20.38	8.38	28.59	6.37	21.73	8.63	29.44	5.61	19.14
					31	87.8	7.45	25.41	6.25	21.34	8.46	28.87	6.68	22.81	8.72	29.74	6.10	20.82
Low	1500	883	0	0	23	73.4	7.00	23.90	4.55	15.53	7.96	27.16	5.57	19.01	8.20	27.97	4.10	13.99
					24	75.2	7.08	24.14	5.02	17.14	8.04	27.43	5.87	20.03	8.28	28.26	4.55	15.54
					27	80.6	7.15	24.39	5.15	17.56	8.12	27.71	6.17	21.06	8.37	28.54	5.02	17.13
					31	87.8	7.22	24.63	5.34	18.23	8.20	27.99	6.48	22.11	8.45	28.83	5.49	18.74

GKH42K3CI

Fan Speed	Air Flow Rate		ESP		Entering Air DBT		Outdoor Air Dry Bulb Temperature 95 ℉ (35℃)											
							Indoor Air Wet Bulb Temperature ℉ (℃)											
							62 ℉ (17℃)				67 ℉ (19℃)				72 ℉ (22℃)			
							Total Capacity		Sensible Capacity		Total Capacity		Sensible Capacity		Total Capacity		Sensible Capacity	
	m^3/h	cfm	Pa	in.wg	℃	℉	kW	KBtu /h	kW	KBtu /h	kW	KBtu /h	kW	KBtu /h	kW	KBtu /h	kW	KBtu /h
High	1660	977	0	0	23	73.4	9.49	32.37	7.11	24.28	10.78	36.78	7.55	25.75	11.10	37.88	6.00	20.46
					24	75.2	9.58	32.70	7.67	26.16	10.89	37.16	7.95	27.12	11.22	38.27	6.62	22.58
					27	80.6	9.68	33.03	7.84	26.75	11.00	37.53	8.36	28.52	11.33	38.66	7.36	25.13
					31	87.8	9.78	33.36	8.21	28.02	11.11	37.91	8.78	29.95	11.44	39.04	8.01	27.33
Medium	1570	924	0	0	23	73.4	9.30	31.72	6.97	23.79	10.56	36.05	7.40	25.23	10.88	37.13	5.88	20.05
					24	75.2	9.39	32.04	7.51	25.64	10.67	36.41	7.79	26.58	10.99	37.51	6.49	22.13
					27	80.6	9.49	32.37	7.68	26.22	10.78	36.78	8.19	27.95	11.10	37.88	7.22	24.63
					31	87.8	9.58	32.69	8.05	27.46	10.89	37.15	8.60	29.35	11.21	38.26	7.85	26.78
Low	1500	883	0	0	23	73.4	9.01	30.75	5.86	19.99	10.24	34.94	7.17	24.46	10.55	35.99	5.27	18.00
					24	75.2	9.10	31.06	6.46	22.05	10.35	35.30	7.55	25.77	10.66	36.36	5.86	20.00
					27	80.6	9.20	31.38	6.62	22.59	10.45	35.66	7.94	27.10	10.76	36.73	6.46	22.04
					31	87.8	9.29	31.69	6.87	23.45	10.55	36.01	8.34	28.45	10.87	37.09	7.07	24.11

Fan Speed	Air Flow Rate		ESP		Entering Air DBT		Outdoor Air Dry Bulb Temperature 109 ℉ (43℃)											
							Indoor Air Wet Bulb Temperature ℉ (℃)											
							62 ℉ (17℃)				67 ℉ (19℃)				72 ℉ (22℃)			
							Total Capacity		Sensible Capacity		Total Capacity		Sensible Capacity		Total Capacity		Sensible Capacity	
	m^3/h	cfm	Pa	in.wg	℃	℉	kW	KBtu /h	kW	KBtu /h	kW	KBtu /h	kW	KBtu /h	kW	KBtu /h	kW	KBtu /h
High	1660	977	0	0	23	73.4	8.06	27.51	6.05	20.63	9.16	31.26	6.41	21.88	9.44	32.20	5.10	17.39
					24	75.2	8.15	27.79	6.52	22.23	9.26	31.58	6.76	23.06	9.53	32.53	5.63	19.19
					27	80.6	8.23	28.07	6.66	22.74	9.35	31.90	7.11	24.25	9.63	32.86	6.26	21.36
					31	87.8	8.31	28.35	6.98	23.82	9.44	32.22	7.46	25.45	9.73	33.19	6.81	23.23
Medium	1570	924	0	0	23	73.4	7.90	26.96	5.93	20.22	8.98	30.64	6.29	21.45	9.25	31.56	4.99	17.04
					24	75.2	7.98	27.24	6.39	21.79	9.07	30.95	6.62	22.59	9.34	31.88	5.51	18.81
					27	80.6	8.06	27.51	6.53	22.29	9.16	31.26	6.96	23.76	9.44	32.20	6.13	20.93
					31	87.8	8.14	27.79	6.84	23.34	9.25	31.58	7.31	24.95	9.53	32.52	6.67	22.77
Low	1500	883	0	0	23	73.4	7.66	26.14	4.98	16.99	8.70	29.70	6.09	20.79	8.97	30.59	4.48	15.30
					24	75.2	7.74	26.40	5.49	18.75	8.79	30.00	6.42	21.90	9.06	30.90	4.98	17.00
					27	80.6	7.82	26.67	5.63	19.20	8.88	30.31	6.75	23.03	9.15	31.22	5.49	18.73
					31	87.8	7.89	26.94	5.84	19.93	8.97	30.61	7.09	24.18	9.24	31.53	6.01	20.49

Fan Speed	Air Flow Rate		ESP		Entering Air DBT		Outdoor Air Dry Bulb Temperature 118 ℉ (48℃)											
							Indoor Air Wet Bulb Temperature ℉ (℃)											
							62 ℉ (17℃)				67 ℉ (19℃)				72 ℉ (22℃)			
							Total Capacity		Sensible Capacity		Total Capacity		Sensible Capacity		Total Capacity		Sensible Capacity	
	m^3/h	cfm	Pa	in.wg	℃	℉	kW	KBtu /h	kW	KBtu /h	kW	KBtu /h	kW	KBtu /h	kW	KBtu /h	kW	KBtu /h
High	1660	977	0	0	23	73.4	7.87	26.87	5.91	20.15	8.95	30.53	6.26	21.37	9.22	31.44	4.98	16.98
					24	75.2	7.95	27.14	6.36	21.71	9.04	30.84	6.60	22.51	9.31	31.77	5.49	18.74
					27	80.6	8.03	27.41	6.51	22.20	9.13	31.15	6.94	23.68	9.40	32.09	6.11	20.86
					31	87.8	8.11	27.69	6.82	23.26	9.22	31.46	7.28	24.86	9.50	32.41	6.65	22.68
Medium	1570	924	0	0	23	73.4	7.72	26.33	5.79	19.75	8.77	29.92	6.14	20.94	9.03	30.82	4.88	16.64
					24	75.2	7.79	26.60	6.24	21.28	8.86	30.22	6.47	22.06	9.12	31.13	5.38	18.37
					27	80.6	7.87	26.87	6.38	21.76	8.95	30.53	6.80	23.20	9.22	31.44	5.99	20.44
					31	87.8	7.95	27.13	6.68	22.79	9.04	30.83	7.14	24.36	9.31	31.76	6.52	22.23
Low	1500	883	0	0	23	73.4	7.48	25.52	4.86	16.59	8.50	29.00	5.95	20.30	8.76	29.87	4.38	14.94
					24	75.2	7.56	25.78	5.37	18.31	8.59	29.30	6.27	21.39	8.84	30.18	4.86	16.60
					27	80.6	7.63	26.04	5.50	18.75	8.67	29.59	6.59	22.49	8.93	30.48	5.36	18.29
					31	87.8	7.71	26.30	5.70	19.46	8.76	29.89	6.92	23.61	9.02	30.79	5.86	20.01

(3) Floor ceiling type

GTH09K3CI

Fan Speed	Air Flow Rate		ESP		Entering Air DBT		Outdoor Air Dry Bulb Temperature 95 ℉ (35℃)											
							Indoor Air Wet Bulb Temperature ℉ (℃)											
							62 ℉ (17℃)				67 ℉ (19℃)				72 ℉ (22℃)			
							Total Capacity		Sensible Capacity		Total Capacity		Sensible Capacity		Total Capacity		Sensible Capacity	
	m^3/h	cfm	Pa	in.wg	℃	℉	kW	KBtu/h	kW	KBtu/h	kW	KBtu/h	kW	KBtu/h	kW	KBtu/h	kW	KBtu/h
High	900	530	0	0	23	73.4	2.42	8.27	1.82	6.20	2.75	9.40	1.93	6.58	2.84	9.68	1.53	5.23
					24	75.2	2.45	8.35	1.96	6.68	2.78	9.49	2.03	6.93	2.87	9.78	1.69	5.77
					27	80.6	2.47	8.44	2.00	6.83	2.81	9.59	2.14	7.29	2.89	9.88	1.88	6.42
					31	87.8	2.50	8.52	2.10	7.16	2.84	9.68	2.24	7.65	2.92	9.97	2.05	6.98
Medium	800	471	0	0	23	73.4	2.37	8.10	1.78	6.08	2.70	9.21	1.89	6.45	2.78	9.48	1.50	5.12
					24	75.2	2.40	8.19	1.92	6.55	2.73	9.30	1.99	6.79	2.81	9.58	1.66	5.65
					27	80.6	2.42	8.27	1.96	6.70	2.75	9.40	2.09	7.14	2.84	9.68	1.84	6.29
					31	87.8	2.45	8.35	2.06	7.01	2.78	9.49	2.20	7.50	2.86	9.77	2.01	6.84
Low	700	412	0	0	23	73.4	2.30	7.86	1.50	5.11	2.62	8.93	1.83	6.25	2.69	9.19	1.35	4.60
					24	75.2	2.33	7.94	1.65	5.63	2.64	9.02	1.93	6.58	2.72	9.29	1.50	5.11
					27	80.6	2.35	8.02	1.69	5.77	2.67	9.11	2.03	6.92	2.75	9.38	1.65	5.63
					31	87.8	2.37	8.10	1.76	5.99	2.70	9.20	2.13	7.27	2.78	9.48	1.81	6.16

Fan Speed	Air Flow Rate		ESP		Entering Air DBT		Outdoor Air Dry Bulb Temperature 109 ℉ (43℃)											
							Indoor Air Wet Bulb Temperature ℉ (℃)											
							62 ℉ (17℃)				67 ℉ (19℃)				72 ℉ (22℃)			
							Total Capacity		Sensible Capacity		Total Capacity		Sensible Capacity		Total Capacity		Sensible Capacity	
	m^3/h	cfm	Pa	in.wg	℃	℉	kW	KBtu/h	kW	KBtu/h	kW	KBtu/h	kW	KBtu/h	kW	KBtu/h	kW	KBtu/h
High	900	530	0	0	23	73.4	2.06	7.03	1.54	5.27	2.34	7.99	1.64	5.59	2.41	8.23	1.30	4.44
					24	75.2	2.08	7.10	1.66	5.68	2.36	8.07	1.73	5.89	2.44	8.31	1.44	4.90
					27	80.6	2.10	7.17	1.70	5.81	2.39	8.15	1.82	6.19	2.46	8.39	1.60	5.46
					31	87.8	2.12	7.24	1.78	6.08	2.41	8.23	1.91	6.50	2.48	8.48	1.74	5.93
Medium	800	471	0	0	23	73.4	2.02	6.89	1.51	5.17	2.29	7.83	1.61	5.48	2.36	8.06	1.28	4.35
					24	75.2	2.04	6.96	1.63	5.57	2.32	7.91	1.69	5.77	2.39	8.14	1.41	4.80
					27	80.6	2.06	7.03	1.67	5.69	2.34	7.99	1.78	6.07	2.41	8.23	1.57	5.35
					31	87.8	2.08	7.10	1.75	5.96	2.36	8.07	1.87	6.37	2.44	8.31	1.70	5.82
Low	700	412	0	0	23	73.4	1.96	6.68	1.27	4.34	2.22	7.59	1.56	5.31	2.29	7.81	1.15	3.91
					24	75.2	1.98	6.74	1.40	4.79	2.25	7.66	1.64	5.60	2.31	7.89	1.27	4.34
					27	80.6	2.00	6.81	1.44	4.91	2.27	7.74	1.72	5.88	2.34	7.97	1.40	4.78
					31	87.8	2.02	6.88	1.49	5.09	2.29	7.82	1.81	6.18	2.36	8.05	1.53	5.24

Fan Speed	Air Flow Rate		ESP		Entering Air DBT		Outdoor Air Dry Bulb Temperature 118 ℉ (48℃)											
							Indoor Air Wet Bulb Temperature ℉ (℃)											
							62 ℉ (17℃)				67 ℉ (19℃)				72 ℉ (22℃)			
							Total Capacity		Sensible Capacity		Total Capacity		Sensible Capacity		Total Capacity		Sensible Capacity	
	m^3/h	cfm	Pa	in.wg	℃	℉	kW	KBtu/h	kW	KBtu/h	kW	KBtu/h	kW	KBtu/h	kW	KBtu/h	kW	KBtu/h
High	900	530	0	0	23	73.4	2.01	6.86	1.51	5.15	2.29	7.80	1.60	5.46	2.35	8.03	1.27	4.34
					24	75.2	2.03	6.93	1.63	5.55	2.31	7.88	1.69	5.75	2.38	8.11	1.40	4.79
					27	80.6	2.05	7.00	1.66	5.67	2.33	7.96	1.77	6.05	2.40	8.20	1.56	5.33
					31	87.8	2.07	7.07	1.74	5.94	2.36	8.04	1.86	6.35	2.43	8.28	1.70	5.79
Medium	800	471	0	0	23	73.4	1.97	6.73	1.48	5.04	2.24	7.64	1.57	5.35	2.31	7.87	1.25	4.25
					24	75.2	1.99	6.79	1.59	5.44	2.26	7.72	1.65	5.64	2.33	7.95	1.38	4.69
					27	80.6	2.01	6.86	1.63	5.56	2.29	7.80	1.74	5.93	2.35	8.03	1.53	5.22
					31	87.8	2.03	6.93	1.71	5.82	2.31	7.88	1.82	6.22	2.38	8.11	1.66	5.68
Low	700	412	0	0	23	73.4	1.91	6.52	1.24	4.24	2.17	7.41	1.52	5.19	2.24	7.63	1.12	3.82
					24	75.2	1.93	6.59	1.37	4.68	2.19	7.48	1.60	5.46	2.26	7.71	1.24	4.24
					27	80.6	1.95	6.65	1.40	4.79	2.22	7.56	1.68	5.75	2.28	7.79	1.37	4.67
					31	87.8	1.97	6.72	1.46	4.97	2.24	7.64	1.77	6.03	2.30	7.86	1.50	5.11

GTH12K3CI

Fan Speed	Air Flow Rate		ESP		Entering Air DBT		Outdoor Air Dry Bulb Temperature 95 ℉ (35℃)											
							Indoor Air Wet Bulb Temperature ℉ (℃)											
							62 ℉ (17℃)				67 ℉ (19℃)				72 ℉ (22℃)			
							Total Capacity		Sensible Capacity		Total Capacity		Sensible Capacity		Total Capacity		Sensible Capacity	
	m^3/h	cfm	Pa	in.wg	℃	℉	kW	KBtu /h	kW	KBtu /h	kW	KBtu /h	kW	KBtu /h	kW	KBtu /h	kW	KBtu /h
High	900	530	0	0	23	73.4	3.04	10.36	2.28	7.77	3.45	11.77	2.41	8.24	3.55	12.12	1.92	6.55
					24	75.2	3.07	10.46	2.45	8.37	3.48	11.89	2.54	8.68	3.59	12.25	2.12	7.23
					27	80.6	3.10	10.57	2.51	8.56	3.52	12.01	2.68	9.13	3.63	12.37	2.36	8.04
					31	87.8	3.13	10.67	2.63	8.97	3.56	12.13	2.81	9.58	3.66	12.49	2.56	8.75
Medium	800	471	0	0	23	73.4	2.97	10.15	2.23	7.61	3.38	11.53	2.37	8.07	3.48	11.88	1.88	6.42
					24	75.2	3.01	10.25	2.40	8.20	3.42	11.65	2.49	8.51	3.52	12.00	2.08	7.08
					27	80.6	3.04	10.36	2.46	8.39	3.45	11.77	2.62	8.95	3.55	12.12	2.31	7.88
					31	87.8	3.07	10.46	2.58	8.79	3.48	11.89	2.75	9.39	3.59	12.24	2.51	8.57
Low	700	412	0	0	23	73.4	2.88	9.84	1.87	6.40	3.28	11.18	2.29	7.83	3.38	11.52	1.69	5.76
					24	75.2	2.91	9.94	2.07	7.06	3.31	11.30	2.42	8.25	3.41	11.63	1.88	6.40
					27	80.6	2.94	10.04	2.12	7.23	3.34	11.41	2.54	8.67	3.44	11.75	2.07	7.05
					31	87.8	2.97	10.14	2.20	7.50	3.38	11.52	2.67	9.10	3.48	11.87	2.26	7.72

Fan Speed	Air Flow Rate		ESP		Entering Air DBT		Outdoor Air Dry Bulb Temperature 109 ℉ (43℃)											
							Indoor Air Wet Bulb Temperature ℉ (℃)											
							62 ℉ (17℃)				67 ℉ (19℃)				72 ℉ (22℃)			
							Total Capacity		Sensible Capacity		Total Capacity		Sensible Capacity		Total Capacity		Sensible Capacity	
	m^3/h	cfm	Pa	in.wg	℃	℉	kW	KBtu /h	kW	KBtu /h	kW	KBtu /h	kW	KBtu /h	kW	KBtu /h	kW	KBtu /h
High	900	530	0	0	23	73.4	2.58	8.80	1.94	6.60	2.93	10.00	2.05	7.00	3.02	10.30	1.63	5.56
					24	75.2	2.61	8.89	2.09	7.12	2.96	10.11	2.16	7.38	3.05	10.41	1.80	6.14
					27	80.6	2.63	8.98	2.13	7.28	2.99	10.21	2.27	7.76	3.08	10.51	2.00	6.83
					31	87.8	2.66	9.07	2.23	7.62	3.02	10.31	2.39	8.15	3.11	10.62	2.18	7.43
Medium	800	471	0	0	23	73.4	2.53	8.63	1.90	6.47	2.87	9.80	2.01	6.86	2.96	10.10	1.60	5.45
					24	75.2	2.55	8.72	2.04	6.97	2.90	9.90	2.12	7.23	2.99	10.20	1.76	6.02
					27	80.6	2.58	8.80	2.09	7.13	2.93	10.00	2.23	7.60	3.02	10.30	1.96	6.70
					31	87.8	2.61	8.89	2.19	7.47	2.96	10.10	2.34	7.98	3.05	10.41	2.14	7.29
Low	700	412	0	0	23	73.4	2.45	8.36	1.59	5.44	2.79	9.50	1.95	6.65	2.87	9.79	1.43	4.89
					24	75.2	2.48	8.45	1.76	6.00	2.81	9.60	2.05	7.01	2.90	9.89	1.59	5.44
					27	80.6	2.50	8.53	1.80	6.14	2.84	9.70	2.16	7.37	2.93	9.99	1.76	5.99
					31	87.8	2.53	8.62	1.87	6.38	2.87	9.80	2.27	7.74	2.96	10.09	1.92	6.56

Fan Speed	Air Flow Rate		ESP		Entering Air DBT		Outdoor Air Dry Bulb Temperature 118 ℉ (48℃)											
							Indoor Air Wet Bulb Temperature ℉ (℃)											
							62 ℉ (17℃)				67 ℉ (19℃)				72 ℉ (22℃)			
							Total Capacity		Sensible Capacity		Total Capacity		Sensible Capacity		Total Capacity		Sensible Capacity	
	m^3/h	cfm	Pa	in.wg	℃	℉	kW	KBtu /h	kW	KBtu /h	kW	KBtu /h	kW	KBtu /h	kW	KBtu /h	kW	KBtu /h
High	900	530	0	0	23	73.4	2.52	8.60	1.89	6.45	2.86	9.77	2.00	6.84	2.95	10.06	1.59	5.43
					24	75.2	2.55	8.68	2.04	6.95	2.89	9.87	2.11	7.20	2.98	10.16	1.76	6.00
					27	80.6	2.57	8.77	2.08	7.11	2.92	9.97	2.22	7.58	3.01	10.27	1.96	6.67
					31	87.8	2.60	8.86	2.18	7.44	2.95	10.07	2.33	7.95	3.04	10.37	2.13	7.26
Medium	800	471	0	0	23	73.4	2.47	8.42	1.85	6.32	2.81	9.57	1.96	6.70	2.89	9.86	1.56	5.32
					24	75.2	2.49	8.51	2.00	6.81	2.83	9.67	2.07	7.06	2.92	9.96	1.72	5.88
					27	80.6	2.52	8.60	2.04	6.96	2.86	9.77	2.18	7.42	2.95	10.06	1.92	6.54
					31	87.8	2.54	8.68	2.14	7.29	2.89	9.87	2.28	7.79	2.98	10.16	2.08	7.11
Low	700	412	0	0	23	73.4	2.39	8.17	1.56	5.31	2.72	9.28	1.90	6.50	2.80	9.56	1.40	4.78
					24	75.2	2.42	8.25	1.72	5.86	2.75	9.38	2.01	6.84	2.83	9.66	1.56	5.31
					27	80.6	2.44	8.33	1.76	6.00	2.78	9.47	2.11	7.20	2.86	9.75	1.72	5.85
					31	87.8	2.47	8.42	1.83	6.23	2.80	9.56	2.21	7.56	2.89	9.85	1.88	6.40

GTH18K3CI

Fan Speed	Air Flow Rate		ESP		Entering Air DBT		Outdoor Air Dry Bulb Temperature 95 ℉ (35℃)											
							Indoor Air Wet Bulb Temperature ℉ (℃)											
							62 ℉ (17℃)				67 ℉ (19℃)				72 ℉ (22℃)			
							Total Capacity		Sensible Capacity		Total Capacity		Sensible Capacity		Total Capacity		Sensible Capacity	
	m^3/h	cfm	Pa	in.wg	℃	℉	kW	KBtu /h	kW	KBtu /h	kW	KBtu /h	kW	KBtu /h	kW	KBtu /h	kW	KBtu /h
High	900	530	0	0	23	73.4	4.58	15.62	3.43	11.72	5.20	17.76	3.64	12.43	5.36	18.29	2.89	9.88
					24	75.2	4.63	15.78	3.70	12.63	5.26	17.94	3.84	13.09	5.41	18.47	3.19	10.90
					27	80.6	4.67	15.94	3.78	12.91	5.31	18.12	4.04	13.77	5.47	18.66	3.56	12.13
					31	87.8	4.72	16.10	3.96	13.53	5.36	18.30	4.24	14.46	5.52	18.85	3.87	13.19
Medium	800	471	0	0	23	73.4	4.49	15.31	3.37	11.48	5.10	17.40	3.57	12.18	5.25	17.92	2.84	9.68
					24	75.2	4.53	15.47	3.63	12.37	5.15	17.58	3.76	12.83	5.31	18.11	3.13	10.68
					27	80.6	4.58	15.62	3.71	12.66	5.20	17.76	3.95	13.49	5.36	18.29	3.48	11.89
					31	87.8	4.63	15.78	3.89	13.26	5.26	17.93	4.15	14.17	5.41	18.47	3.79	12.93
Low	700	412	0	0	23	73.4	4.35	14.84	2.83	9.65	4.94	16.87	3.46	11.81	5.09	17.37	2.55	8.69
					24	75.2	4.39	14.99	3.12	10.65	4.99	17.04	3.65	12.44	5.14	17.55	2.83	9.65
					27	80.6	4.44	15.15	3.20	10.91	5.04	17.21	3.83	13.08	5.20	17.73	3.12	10.64
					31	87.8	4.48	15.30	3.32	11.32	5.09	17.38	4.03	13.73	5.25	17.91	3.41	11.64

Fan Speed	Air Flow Rate		ESP		Entering Air DBT		Outdoor Air Dry Bulb Temperature 109 ℉ (43℃)											
							Indoor Air Wet Bulb Temperature ℉ (℃)											
							62 ℉ (17℃)				67 ℉ (19℃)				72 ℉ (22℃)			
							Total Capacity		Sensible Capacity		Total Capacity		Sensible Capacity		Total Capacity		Sensible Capacity	
	m^3/h	cfm	Pa	in.wg	℃	℉	kW	KBtu /h	kW	KBtu /h	kW	KBtu /h	kW	KBtu /h	kW	KBtu /h	kW	KBtu /h
High	900	530	0	0	23	73.4	3.89	13.28	2.92	9.96	4.42	15.09	3.10	10.56	4.56	15.54	2.46	8.39
					24	75.2	3.93	13.42	3.15	10.73	4.47	15.25	3.26	11.13	4.60	15.70	2.72	9.27
					27	80.6	3.97	13.55	3.22	10.98	4.51	15.40	3.43	11.70	4.65	15.86	3.02	10.31
					31	87.8	4.01	13.69	3.37	11.50	4.56	15.55	3.60	12.29	4.70	16.02	3.29	11.21
Medium	800	471	0	0	23	73.4	3.81	13.02	2.86	9.76	4.33	14.79	3.03	10.35	4.46	15.23	2.41	8.23
					24	75.2	3.85	13.15	3.08	10.52	4.38	14.94	3.20	10.91	4.51	15.39	2.66	9.08
					27	80.6	3.89	13.28	3.15	10.76	4.42	15.09	3.36	11.47	4.56	15.54	2.96	10.10
					31	87.8	3.93	13.41	3.30	11.27	4.47	15.24	3.53	12.04	4.60	15.70	3.22	10.99
Low	700	412	0	0	23	73.4	3.70	12.62	2.40	8.20	4.20	14.34	2.94	10.04	4.33	14.77	2.16	7.38
					24	75.2	3.74	12.75	2.65	9.05	4.24	14.48	3.10	10.57	4.37	14.92	2.40	8.21
					27	80.6	3.77	12.87	2.72	9.27	4.29	14.63	3.26	11.12	4.42	15.07	2.65	9.04
					31	87.8	3.81	13.00	2.82	9.62	4.33	14.78	3.42	11.67	4.46	15.22	2.90	9.89

Fan Speed	Air Flow Rate		ESP		Entering Air DBT		Outdoor Air Dry Bulb Temperature 118 ℉ (48℃)											
							Indoor Air Wet Bulb Temperature ℉ (℃)											
							62 ℉ (17℃)				67 ℉ (19℃)				72 ℉ (22℃)			
							Total Capacity		Sensible Capacity		Total Capacity		Sensible Capacity		Total Capacity		Sensible Capacity	
	m^3/h	cfm	Pa	in.wg	℃	℉	kW	KBtu /h	kW	KBtu /h	kW	KBtu /h	kW	KBtu /h	kW	KBtu /h	kW	KBtu /h
High	900	530	0	0	23	73.4	3.80	12.97	2.85	9.73	4.32	14.74	3.02	10.32	4.45	15.18	2.40	8.20
					24	75.2	3.84	13.10	3.07	10.48	4.36	14.89	3.19	10.87	4.49	15.33	2.65	9.05
					27	80.6	3.88	13.23	3.14	10.72	4.41	15.04	3.35	11.43	4.54	15.49	2.95	10.07
					31	87.8	3.92	13.37	3.29	11.23	4.45	15.19	3.52	12.00	4.58	15.64	3.21	10.95
Medium	800	471	0	0	23	73.4	3.72	12.71	2.79	9.53	4.23	14.44	2.96	10.11	4.36	14.88	2.35	8.03
					24	75.2	3.76	12.84	3.01	10.27	4.28	14.59	3.12	10.65	4.40	15.03	2.60	8.87
					27	80.6	3.80	12.97	3.08	10.50	4.32	14.74	3.28	11.20	4.45	15.18	2.89	9.87
					31	87.8	3.84	13.10	3.22	11.00	4.36	14.88	3.45	11.76	4.49	15.33	3.15	10.73
Low	700	412	0	0	23	73.4	3.61	12.32	2.35	8.01	4.10	14.00	2.87	9.80	4.23	14.42	2.11	7.21
					24	75.2	3.65	12.45	2.59	8.84	4.15	14.14	3.03	10.32	4.27	14.57	2.35	8.01
					27	80.6	3.68	12.57	2.65	9.05	4.19	14.29	3.18	10.86	4.31	14.71	2.59	8.83
					31	87.8	3.72	12.70	2.75	9.40	4.23	14.43	3.34	11.40	4.36	14.86	2.83	9.66

GTH24K3CI

Fan Speed	Air Flow Rate		ESP		Entering Air DBT		Outdoor Air Dry Bulb Temperature 95 ℉ (35℃)											
							Indoor Air Wet Bulb Temperature ℉ (℃)											
							62 ℉ (17℃)				67 ℉ (19℃)				72 ℉ (22℃)			
							Total Capacity		Sensible Capacity		Total Capacity		Sensible Capacity		Total Capacity		Sensible Capacity	
	m^3/h	cfm	Pa	in.wg	℃	℉	kW	KBtu /h	kW	KBtu /h	kW	KBtu /h	kW	KBtu /h	kW	KBtu /h	kW	KBtu /h
High	1250	736	0	0	23	73.4	6.06	20.69	4.55	15.51	6.89	23.51	4.82	16.45	7.10	24.21	3.83	13.07
					24	75.2	6.12	20.90	4.90	16.72	6.96	23.75	5.08	17.33	7.17	24.46	4.23	14.43
					27	80.6	6.19	21.11	5.01	17.10	7.03	23.99	5.34	18.23	7.24	24.71	4.71	16.06
					31	87.8	6.25	21.32	5.25	17.91	7.10	24.23	5.61	19.14	7.31	24.95	5.12	17.47
Medium	1100	647	0	0	23	73.4	5.94	20.27	4.46	15.20	6.75	23.04	4.73	16.13	6.95	23.73	3.76	12.81
					24	75.2	6.00	20.48	4.80	16.38	6.82	23.27	4.98	16.99	7.03	23.97	4.14	14.14
					27	80.6	6.06	20.69	4.91	16.76	6.89	23.51	5.24	17.87	7.10	24.21	4.61	15.74
					31	87.8	6.12	20.89	5.14	17.55	6.96	23.74	5.50	18.76	7.17	24.45	5.02	17.12
Low	950	559	0	0	23	73.4	5.76	19.65	3.74	12.77	6.54	22.33	4.58	15.63	6.74	23.00	3.37	11.50
					24	75.2	5.82	19.85	4.13	14.09	6.61	22.56	4.83	16.47	6.81	23.24	3.75	12.78
					27	80.6	5.88	20.05	4.23	14.44	6.68	22.79	5.08	17.32	6.88	23.47	4.13	14.08
					31	87.8	5.94	20.25	4.39	14.99	6.75	23.01	5.33	18.18	6.95	23.71	4.52	15.41

Fan Speed	Air Flow Rate		ESP		Entering Air DBT		Outdoor Air Dry Bulb Temperature 109 ℉ (43℃)											
							Indoor Air Wet Bulb Temperature ℉ (℃)											
							62 ℉ (17℃)				67 ℉ (19℃)				72 ℉ (22℃)			
							Total Capacity		Sensible Capacity		Total Capacity		Sensible Capacity		Total Capacity		Sensible Capacity	
	m^3/h	cfm	Pa	in.wg	℃	℉	kW	KBtu /h	kW	KBtu /h	kW	KBtu /h	kW	KBtu /h	kW	KBtu /h	kW	KBtu /h
High	1250	736	0	0	23	73.4	5.15	17.58	3.86	13.19	5.86	19.98	4.10	13.99	6.03	20.58	3.26	11.11
					24	75.2	5.21	17.76	4.16	14.21	5.92	20.18	4.32	14.73	6.09	20.79	3.59	12.27
					27	80.6	5.26	17.94	4.26	14.53	5.98	20.39	4.54	15.50	6.15	21.00	4.00	13.65
					31	87.8	5.31	18.12	4.46	15.22	6.04	20.59	4.77	16.27	6.22	21.21	4.35	14.85
Medium	1100	647	0	0	23	73.4	5.05	17.23	3.79	12.92	5.74	19.58	4.02	13.71	5.91	20.17	3.19	10.89
					24	75.2	5.10	17.41	4.08	13.93	5.80	19.78	4.23	14.44	5.97	20.37	3.52	12.02
					27	80.6	5.15	17.58	4.17	14.24	5.86	19.98	4.45	15.19	6.03	20.58	3.92	13.38
					31	87.8	5.20	17.76	4.37	14.92	5.91	20.18	4.67	15.94	6.09	20.79	4.26	14.55
Low	950	559	0	0	23	73.4	4.90	16.70	3.18	10.86	5.56	18.98	3.89	13.29	5.73	19.55	2.87	9.78
					24	75.2	4.95	16.87	3.51	11.98	5.62	19.18	4.10	14.00	5.79	19.75	3.18	10.86
					27	80.6	5.00	17.04	3.60	12.27	5.68	19.37	4.31	14.72	5.85	19.95	3.51	11.97
					31	87.8	5.05	17.22	3.73	12.74	5.73	19.56	4.53	15.45	5.91	20.15	3.84	13.10

Fan Speed	Air Flow Rate		ESP		Entering Air DBT		Outdoor Air Dry Bulb Temperature 118 ℉ (48℃)											
							Indoor Air Wet Bulb Temperature ℉ (℃)											
							62 ℉ (17℃)				67 ℉ (19℃)				72 ℉ (22℃)			
							Total Capacity		Sensible Capacity		Total Capacity		Sensible Capacity		Total Capacity		Sensible Capacity	
	m^3/h	cfm	Pa	in.wg	℃	℉	kW	KBtu /h	kW	KBtu /h	kW	KBtu /h	kW	KBtu /h	kW	KBtu /h	kW	KBtu /h
High	1250	736	0	0	23	73.4	5.03	17.17	3.77	12.88	5.72	19.51	4.00	13.66	5.89	20.10	3.18	10.85
					24	75.2	5.08	17.34	4.07	13.88	5.78	19.71	4.22	14.39	5.95	20.30	3.51	11.98
					27	80.6	5.13	17.52	4.16	14.19	5.83	19.91	4.43	15.13	6.01	20.51	3.91	13.33
					31	87.8	5.19	17.69	4.36	14.86	5.89	20.11	4.66	15.89	6.07	20.71	4.25	14.50
Medium	1100	647	0	0	23	73.4	4.93	16.83	3.70	12.62	5.60	19.12	3.92	13.38	5.77	19.69	3.12	10.63
					24	75.2	4.98	17.00	3.99	13.60	5.66	19.32	4.13	14.10	5.83	19.89	3.44	11.74
					27	80.6	5.03	17.17	4.08	13.91	5.72	19.51	4.35	14.83	5.89	20.10	3.83	13.06
					31	87.8	5.08	17.34	4.27	14.57	5.78	19.71	4.56	15.57	5.95	20.30	4.16	14.21
Low	950	559	0	0	23	73.4	4.78	16.31	3.11	10.60	5.43	18.53	3.80	12.97	5.60	19.09	2.80	9.55
					24	75.2	4.83	16.48	3.43	11.70	5.49	18.72	4.01	13.67	5.65	19.29	3.11	10.61
					27	80.6	4.88	16.64	3.51	11.98	5.54	18.91	4.21	14.37	5.71	19.48	3.43	11.69
					31	87.8	4.93	16.81	3.65	12.44	5.60	19.10	4.42	15.09	5.77	19.68	3.75	12.79

GTH30K3CI

Fan Speed	Air Flow Rate		ESP		Entering Air DBT		Outdoor Air Dry Bulb Temperature 95 ℉ (35℃)											
							Indoor Air Wet Bulb Temperature ℉ (℃)											
							62 ℉ (17℃)				67 ℉ (19℃)				72 ℉ (22℃)			
							Total Capacity		Sensible Capacity		Total Capacity		Sensible Capacity		Total Capacity		Sensible Capacity	
	m^3/h	cfm	Pa	in.wg	℃	℉	kW	KBtu /h	kW	KBtu /h	kW	KBtu /h	kW	KBtu /h	kW	KBtu /h	kW	KBtu /h
High	1600	942	0	0	23	73.4	7.60	25.92	5.70	19.44	8.63	29.46	6.04	20.62	8.89	30.34	4.80	16.38
					24	75.2	7.68	26.19	6.14	20.95	8.72	29.76	6.37	21.72	8.98	30.65	5.30	18.08
					27	80.6	7.75	26.45	6.28	21.43	8.81	30.06	6.70	22.85	9.07	30.96	5.90	20.12
					31	87.8	7.83	26.72	6.58	22.44	8.90	30.36	7.03	23.98	9.17	31.27	6.42	21.89
Medium	1450	853	0	0	23	73.4	7.45	25.41	5.58	19.05	8.46	28.87	5.92	20.21	8.71	29.74	4.71	16.06
					24	75.2	7.52	25.66	6.02	20.53	8.55	29.16	6.24	21.29	8.80	30.04	5.19	17.72
					27	80.6	7.60	25.92	6.15	21.00	8.63	29.46	6.56	22.39	8.89	30.34	5.78	19.72
					31	87.8	7.67	26.18	6.45	21.99	8.72	29.75	6.89	23.50	8.98	30.65	6.29	21.45
Low	1300	765	0	0	23	73.4	7.22	24.63	4.69	16.01	8.20	27.99	5.74	19.59	8.45	28.83	4.22	14.41
					24	75.2	7.29	24.88	5.18	17.66	8.29	28.27	6.05	20.64	8.53	29.12	4.69	16.02
					27	80.6	7.37	25.13	5.30	18.09	8.37	28.56	6.36	21.70	8.62	29.41	5.17	17.65
					31	87.8	7.44	25.38	5.50	18.78	8.45	28.84	6.68	22.79	8.71	29.71	5.66	19.31

Fan Speed	Air Flow Rate		ESP		Entering Air DBT		Outdoor Air Dry Bulb Temperature 109 ℉ (43℃)											
							Indoor Air Wet Bulb Temperature ℉ (℃)											
							62 ℉ (17℃)				67 ℉ (19℃)				72 ℉ (22℃)			
							Total Capacity		Sensible Capacity		Total Capacity		Sensible Capacity		Total Capacity		Sensible Capacity	
	m^3/h	cfm	Pa	in.wg	℃	℉	kW	KBtu /h	kW	KBtu /h	kW	KBtu /h	kW	KBtu /h	kW	KBtu /h	kW	KBtu /h
High	1600	942	0	0	23	73.4	6.46	22.03	4.84	16.53	7.34	25.04	5.14	17.53	7.56	25.79	4.08	13.93
					24	75.2	6.52	22.26	5.22	17.81	7.41	25.30	5.41	18.47	7.64	26.05	4.51	15.37
					27	80.6	6.59	22.48	5.34	18.21	7.49	25.55	5.69	19.42	7.71	26.32	5.01	17.11
					31	87.8	6.66	22.71	5.59	19.08	7.56	25.81	5.98	20.39	7.79	26.58	5.45	18.61
Medium	1450	853	0	0	23	73.4	6.33	21.59	4.75	16.20	7.19	24.54	5.03	17.18	7.41	25.28	4.00	13.65
					24	75.2	6.39	21.81	5.11	17.45	7.27	24.79	5.30	18.10	7.48	25.53	4.42	15.06
					27	80.6	6.46	22.03	5.23	17.85	7.34	25.04	5.58	19.03	7.56	25.79	4.91	16.76
					31	87.8	6.52	22.26	5.48	18.69	7.41	25.29	5.86	19.98	7.63	26.05	5.34	18.23
Low	1300	765	0	0	23	73.4	6.14	20.93	3.99	13.61	6.97	23.79	4.88	16.65	7.18	24.50	3.59	12.25
					24	75.2	6.20	21.15	4.40	15.01	7.04	24.03	5.14	17.54	7.25	24.75	3.99	13.61
					27	80.6	6.26	21.36	4.51	15.38	7.11	24.27	5.41	18.45	7.33	25.00	4.40	15.00
					31	87.8	6.32	21.57	4.68	15.96	7.19	24.52	5.68	19.37	7.40	25.25	4.81	16.41

Fan Speed	Air Flow Rate		ESP		Entering Air DBT		Outdoor Air Dry Bulb Temperature 118 ℉ (48℃)											
							Indoor Air Wet Bulb Temperature ℉ (℃)											
							62 ℉ (17℃)				67 ℉ (19℃)				72 ℉ (22℃)			
							Total Capacity		Sensible Capacity		Total Capacity		Sensible Capacity		Total Capacity		Sensible Capacity	
	m^3/h	cfm	Pa	in.wg	℃	℉	kW	KBtu /h	kW	KBtu /h	kW	KBtu /h	kW	KBtu /h	kW	KBtu /h	kW	KBtu /h
High	1600	942	0	0	23	73.4	6.31	21.52	4.73	16.14	7.17	24.45	5.02	17.12	7.38	25.18	3.99	13.60
					24	75.2	6.37	21.74	5.10	17.39	7.24	24.70	5.28	18.03	7.46	25.44	4.40	15.01
					27	80.6	6.43	21.96	5.21	17.78	7.31	24.95	5.56	18.96	7.53	25.70	4.90	16.70
					31	87.8	6.50	22.18	5.46	18.63	7.39	25.20	5.83	19.91	7.61	25.96	5.32	18.17
Medium	1450	853	0	0	23	73.4	6.18	21.09	4.64	15.81	7.02	23.96	4.92	16.77	7.23	24.68	3.91	13.33
					24	75.2	6.24	21.30	4.99	17.04	7.09	24.21	5.18	17.67	7.31	24.93	4.31	14.71
					27	80.6	6.31	21.52	5.11	17.43	7.17	24.45	5.45	18.58	7.38	25.18	4.80	16.37
					31	87.8	6.37	21.73	5.35	18.25	7.24	24.70	5.72	19.51	7.45	25.44	5.22	17.81
Low	1300	765	0	0	23	73.4	5.99	20.44	3.89	13.29	6.81	23.23	4.77	16.26	7.01	23.92	3.51	11.96
					24	75.2	6.05	20.65	4.30	14.66	6.88	23.47	5.02	17.13	7.08	24.17	3.90	13.29
					27	80.6	6.11	20.86	4.40	15.02	6.95	23.70	5.28	18.01	7.16	24.41	4.29	14.65
					31	87.8	6.17	21.07	4.57	15.59	7.02	23.94	5.54	18.91	7.23	24.66	4.70	16.03

GTH36K3CI

Fan Speed	Air Flow Rate		ESP		Entering Air DBT		Outdoor Air Dry Bulb Temperature 95 ℉ (35℃)											
							Indoor Air Wet Bulb Temperature ℉ (℃)											
							62 ℉ (17℃)				67 ℉ (19℃)				72 ℉ (22℃)			
							Total Capacity		Sensible Capacity		Total Capacity		Sensible Capacity		Total Capacity		Sensible Capacity	
	m^3/h	cfm	Pa	in.wg	℃	℉	kW	KBtu /h	kW	KBtu /h	kW	KBtu /h	kW	KBtu /h	kW	KBtu /h	kW	KBtu /h
High	2000	1177	0	0	23	73.4	9.14	31.19	6.86	23.39	10.39	35.44	7.27	24.81	10.70	36.51	5.78	19.71
					24	75.2	9.23	31.51	7.39	25.21	10.49	35.81	7.66	26.14	10.81	36.88	6.38	21.76
					27	80.6	9.33	31.83	7.56	25.78	10.60	36.17	8.06	27.49	10.92	37.25	7.10	24.21
					31	87.8	9.42	32.15	7.91	27.00	10.71	36.53	8.46	28.86	11.03	37.62	7.72	26.34
Medium	1630	959	0	0	23	73.4	8.96	30.57	6.72	22.93	10.18	34.73	7.13	24.31	10.49	35.78	5.66	19.32
					24	75.2	9.05	30.88	7.24	24.70	10.28	35.09	7.51	25.62	10.59	36.14	6.25	21.32
					27	80.6	9.14	31.19	7.40	25.26	10.39	35.44	7.89	26.94	10.70	36.51	6.95	23.73
					31	87.8	9.23	31.50	7.76	26.46	10.49	35.80	8.29	28.28	10.81	36.87	7.56	25.81
Low	1520	895	0	0	23	73.4	8.68	29.63	5.64	19.26	9.87	33.67	6.91	23.57	10.16	34.68	5.08	17.34
					24	75.2	8.77	29.93	6.23	21.25	9.97	34.02	7.28	24.83	10.27	35.04	5.65	19.27
					27	80.6	8.86	30.24	6.38	21.77	10.07	34.36	7.65	26.11	10.37	35.39	6.22	21.23
					31	87.8	8.95	30.54	6.62	22.60	10.17	34.70	8.03	27.41	10.48	35.74	6.81	23.23

Fan Speed	Air Flow Rate		ESP		Entering Air DBT		Outdoor Air Dry Bulb Temperature 109 ℉ (43℃)											
							Indoor Air Wet Bulb Temperature ℉ (℃)											
							62 ℉ (17℃)				67 ℉ (19℃)				72 ℉ (22℃)			
							Total Capacity		Sensible Capacity		Total Capacity		Sensible Capacity		Total Capacity		Sensible Capacity	
	m^3/h	cfm	Pa	in.wg	℃	℉	kW	KBtu /h	kW	KBtu /h	kW	KBtu /h	kW	KBtu /h	kW	KBtu /h	kW	KBtu /h
High	2000	1177	0	0	23	73.4	7.77	26.51	5.83	19.88	8.83	30.13	6.18	21.09	9.09	31.03	4.91	16.76
					24	75.2	7.85	26.78	6.28	21.43	8.92	30.43	6.51	22.22	9.19	31.35	5.42	18.50
					27	80.6	7.93	27.05	6.42	21.91	9.01	30.74	6.85	23.36	9.28	31.66	6.03	20.58
					31	87.8	8.01	27.32	6.73	22.95	9.10	31.05	7.19	24.53	9.37	31.98	6.56	22.39
Medium	1630	959	0	0	23	73.4	7.61	25.98	5.71	19.49	8.65	29.52	6.06	20.67	8.91	30.41	4.81	16.42
					24	75.2	7.69	26.25	6.15	21.00	8.74	29.83	6.38	21.77	9.00	30.72	5.31	18.13
					27	80.6	7.77	26.51	6.29	21.47	8.83	30.13	6.71	22.90	9.09	31.03	5.91	20.17
					31	87.8	7.85	26.78	6.59	22.49	8.92	30.43	7.05	24.04	9.19	31.34	6.43	21.94
Low	1520	895	0	0	23	73.4	7.38	25.19	4.80	16.37	8.39	28.62	5.87	20.03	8.64	29.48	4.32	14.74
					24	75.2	7.46	25.44	5.29	18.06	8.47	28.91	6.19	21.11	8.73	29.78	4.80	16.38
					27	80.6	7.53	25.70	5.42	18.50	8.56	29.21	6.51	22.20	8.82	30.08	5.29	18.05
					31	87.8	7.61	25.96	5.63	19.21	8.65	29.50	6.83	23.30	8.90	30.38	5.79	19.75

Fan Speed	Air Flow Rate		ESP		Entering Air DBT		Outdoor Air Dry Bulb Temperature 118 ℉ (48℃)											
							Indoor Air Wet Bulb Temperature ℉ (℃)											
							62 ℉ (17℃)				67 ℉ (19℃)				72 ℉ (22℃)			
							Total Capacity		Sensible Capacity		Total Capacity		Sensible Capacity		Total Capacity		Sensible Capacity	
	m^3/h	cfm	Pa	in.wg	℃	℉	kW	KBtu /h	kW	KBtu /h	kW	KBtu /h	kW	KBtu /h	kW	KBtu /h	kW	KBtu /h
High	2000	1177	0	0	23	73.4	7.59	25.89	5.69	19.42	8.62	29.42	6.04	20.59	8.88	30.30	4.80	16.36
					24	75.2	7.66	26.15	6.13	20.92	8.71	29.72	6.36	21.69	8.97	30.61	5.29	18.06
					27	80.6	7.74	26.42	6.27	21.40	8.80	30.02	6.69	22.81	9.06	30.92	5.89	20.10
					31	87.8	7.82	26.68	6.57	22.41	8.89	30.32	7.02	23.95	9.15	31.23	6.41	21.86
Medium	1630	959	0	0	23	73.4	7.44	25.37	5.58	19.03	8.45	28.83	5.91	20.18	8.70	29.69	4.70	16.04
					24	75.2	7.51	25.63	6.01	20.50	8.54	29.12	6.23	21.26	8.79	30.00	5.19	17.70
					27	80.6	7.59	25.89	6.15	20.97	8.62	29.42	6.55	22.36	8.88	30.30	5.77	19.70
					31	87.8	7.66	26.15	6.44	21.96	8.71	29.71	6.88	23.47	8.97	30.60	6.28	21.42
Low	1520	895	0	0	23	73.4	7.21	24.59	4.69	15.99	8.19	27.95	5.73	19.56	8.44	28.79	4.22	14.39
					24	75.2	7.28	24.84	5.17	17.64	8.27	28.23	6.04	20.61	8.52	29.08	4.69	15.99
					27	80.6	7.36	25.10	5.30	18.07	8.36	28.52	6.35	21.67	8.61	29.37	5.17	17.62
					31	87.8	7.43	25.35	5.50	18.76	8.44	28.80	6.67	22.75	8.69	29.67	5.65	19.28

GTH42K3CI

Fan Speed	Air Flow Rate		ESP		Entering Air DBT		Outdoor Air Dry Bulb Temperature 95 ℉ (35℃)											
							Indoor Air Wet Bulb Temperature ℉ (℃)											
							62 ℉ (17℃)				67 ℉ (19℃)				72 ℉ (22℃)			
							Total Capacity		Sensible Capacity		Total Capacity		Sensible Capacity		Total Capacity		Sensible Capacity	
	m^3/h	cfm	Pa	in.wg	℃	℉	kW	KBtu /h	kW	KBtu /h	kW	KBtu /h	kW	KBtu /h	kW	KBtu /h	kW	KBtu /h
High	2000	1177	0	0	23	73.4	10.26	35.02	7.70	26.26	11.66	39.79	8.16	27.85	12.01	40.98	6.49	22.13
					24	75.2	10.37	35.37	8.29	28.30	11.78	40.20	8.60	29.34	12.13	41.40	7.16	24.43
					27	80.6	10.47	35.73	8.48	28.94	11.90	40.60	9.04	30.86	12.26	41.82	7.97	27.18
					31	87.8	10.58	36.09	8.88	30.31	12.02	41.01	9.50	32.40	12.38	42.24	8.67	29.57
Medium	1630	959	0	0	23	73.4	10.06	34.32	7.54	25.74	11.43	38.99	8.00	27.30	11.77	40.16	6.36	21.69
					24	75.2	10.16	34.67	8.13	27.73	11.55	39.39	8.43	28.76	11.89	40.57	7.02	23.94
					27	80.6	10.26	35.02	8.31	28.36	11.66	39.79	8.86	30.24	12.01	40.98	7.81	26.64
					31	87.8	10.37	35.37	8.71	29.71	11.78	40.19	9.31	31.75	12.13	41.39	8.49	28.98
Low	1520	895	0	0	23	73.4	9.75	33.27	6.34	21.62	11.08	37.80	7.76	26.46	11.41	38.94	5.71	19.47
					24	75.2	9.85	33.60	6.99	23.86	11.19	38.19	8.17	27.88	11.53	39.33	6.34	21.63
					27	80.6	9.95	33.94	7.16	24.44	11.31	38.57	8.59	29.32	11.64	39.73	6.99	23.84
					31	87.8	10.05	34.28	7.44	25.37	11.42	38.96	9.02	30.78	11.76	40.13	7.64	26.08

Fan Speed	Air Flow Rate		ESP		Entering Air DBT		Outdoor Air Dry Bulb Temperature 109 ℉ (43℃)											
							Indoor Air Wet Bulb Temperature ℉ (℃)											
							62 ℉ (17℃)				67 ℉ (19℃)				72 ℉ (22℃)			
							Total Capacity		Sensible Capacity		Total Capacity		Sensible Capacity		Total Capacity		Sensible Capacity	
	m^3/h	cfm	Pa	in.wg	℃	℉	kW	KBtu /h	kW	KBtu /h	kW	KBtu /h	kW	KBtu /h	kW	KBtu /h	kW	KBtu /h
High	2000	1177	0	0	23	73.4	8.72	29.76	6.54	22.32	9.91	33.82	6.94	23.68	10.21	34.84	5.51	18.81
					24	75.2	8.81	30.07	7.05	24.05	10.01	34.17	7.31	24.94	10.31	35.19	6.09	20.76
					27	80.6	8.90	30.37	7.21	24.60	10.12	34.51	7.69	26.23	10.42	35.55	6.77	23.11
					31	87.8	8.99	30.67	7.55	25.77	10.22	34.86	8.07	27.54	10.52	35.90	7.37	25.13
Medium	1630	959	0	0	23	73.4	8.55	29.17	6.41	21.88	9.71	33.15	6.80	23.20	10.01	34.14	5.40	18.44
					24	75.2	8.64	29.47	6.91	23.57	9.81	33.48	7.16	24.44	10.11	34.49	5.96	20.35
					27	80.6	8.72	29.76	7.07	24.11	9.91	33.82	7.53	25.70	10.21	34.84	6.64	22.64
					31	87.8	8.81	30.06	7.40	25.25	10.01	34.16	7.91	26.99	10.31	35.19	7.22	24.63
Low	1520	895	0	0	23	73.4	8.29	28.28	5.39	18.38	9.42	32.13	6.59	22.49	9.70	33.09	4.85	16.55
					24	75.2	8.37	28.56	5.94	20.28	9.51	32.46	6.94	23.69	9.80	33.43	5.39	18.39
					27	80.6	8.46	28.85	6.09	20.77	9.61	32.79	7.30	24.92	9.90	33.77	5.94	20.26
					31	87.8	8.54	29.14	6.32	21.56	9.71	33.11	7.67	26.16	10.00	34.11	6.50	22.17

Fan Speed	Air Flow Rate		ESP		Entering Air DBT		Outdoor Air Dry Bulb Temperature 118 ℉ (48℃)											
							Indoor Air Wet Bulb Temperature ℉ (℃)											
							62 ℉ (17℃)				67 ℉ (19℃)				72 ℉ (22℃)			
							Total Capacity		Sensible Capacity		Total Capacity		Sensible Capacity		Total Capacity		Sensible Capacity	
	m^3/h	cfm	Pa	in.wg	℃	℉	kW	KBtu /h	kW	KBtu /h	kW	KBtu /h	kW	KBtu /h	kW	KBtu /h	kW	KBtu /h
High	2000	1177	0	0	23	73.4	8.52	29.06	6.39	21.80	9.68	33.03	6.78	23.12	9.97	34.02	5.38	18.37
					24	75.2	8.60	29.36	6.88	23.49	9.78	33.36	7.14	24.36	10.07	34.36	5.94	20.27
					27	80.6	8.69	29.66	7.04	24.02	9.88	33.70	7.51	25.61	10.17	34.71	6.61	22.56
					31	87.8	8.78	29.95	7.37	25.16	9.98	34.04	7.88	26.89	10.28	35.06	7.19	24.54
Medium	1630	959	0	0	23	73.4	8.35	28.48	6.26	21.36	9.49	32.37	6.64	22.66	9.77	33.34	5.28	18.00
					24	75.2	8.43	28.77	6.75	23.02	9.58	32.70	7.00	23.87	9.87	33.68	5.82	19.87
					27	80.6	8.52	29.06	6.90	23.54	9.68	33.03	7.36	25.10	9.97	34.02	6.48	22.11
					31	87.8	8.60	29.35	7.23	24.66	9.78	33.36	7.72	26.35	10.07	34.36	7.05	24.05
Low	1520	895	0	0	23	73.4	8.09	27.61	5.26	17.95	9.20	31.38	6.44	21.96	9.47	32.32	4.74	16.16
					24	75.2	8.17	27.89	5.80	19.80	9.29	31.70	6.78	23.14	9.57	32.65	5.26	17.96
					27	80.6	8.26	28.17	5.95	20.28	9.38	32.02	7.13	24.33	9.66	32.98	5.80	19.79
					31	87.8	8.34	28.46	6.17	21.06	9.48	32.34	7.49	25.55	9.76	33.31	6.34	21.65

GTH48K3CI

Fan Speed	Air Flow Rate		ESP		Entering Air DBT		Outdoor Air Dry Bulb Temperature 95 ℉ (35℃)											
							Indoor Air Wet Bulb Temperature ℉ (℃)											
							62 ℉ (17℃)				67 ℉ (19℃)				72 ℉ (22℃)			
							Total Capacity		Sensible Capacity		Total Capacity		Sensible Capacity		Total Capacity		Sensible Capacity	
	m^3/h	cfm	Pa	in.wg	℃	℉	kW	KBtu /h	kW	KBtu /h	kW	KBtu /h	kW	KBtu /h	kW	KBtu /h	kW	KBtu /h
High	2000	1177	0	0	23	73.4	12.07	41.20	9.06	30.90	13.72	46.81	9.60	32.77	14.13	48.22	7.63	26.04
					24	75.2	12.20	41.62	9.76	33.29	13.86	47.29	10.12	34.52	14.28	48.71	8.42	28.74
					27	80.6	12.32	42.04	9.98	34.05	14.00	47.77	10.64	36.30	14.42	49.20	9.37	31.98
					31	87.8	12.44	42.46	10.45	35.66	14.14	48.25	11.17	38.11	14.56	49.69	10.19	34.79
Medium	1800	1059	0	0	23	73.4	11.83	40.37	8.87	30.28	13.45	45.88	9.41	32.11	13.85	47.25	7.48	25.52
					24	75.2	11.95	40.78	9.56	32.63	13.58	46.34	9.92	33.83	13.99	47.73	8.25	28.16
					27	80.6	12.07	41.20	9.78	33.37	13.72	46.81	10.43	35.58	14.13	48.22	9.19	31.34
					31	87.8	12.19	41.61	10.24	34.95	13.86	47.28	10.95	37.35	14.27	48.70	9.99	34.09
Low	1600	942	0	0	23	73.4	11.47	39.14	7.46	25.44	13.03	44.47	9.12	31.13	13.43	45.81	6.71	22.90
					24	75.2	11.59	39.53	8.23	28.07	13.17	44.93	9.61	32.80	13.56	46.27	7.46	25.45
					27	80.6	11.70	39.93	8.43	28.75	13.30	45.38	10.11	34.49	13.70	46.74	8.22	28.04
					31	87.8	11.82	40.33	8.75	29.85	13.43	45.83	10.61	36.21	13.84	47.21	8.99	30.69

Fan Speed	Air Flow Rate		ESP		Entering Air DBT		Outdoor Air Dry Bulb Temperature 109 ℉ (43℃)											
							Indoor Air Wet Bulb Temperature ℉ (℃)											
							62 ℉ (17℃)				67 ℉ (19℃)				72 ℉ (22℃)			
							Total Capacity		Sensible Capacity		Total Capacity		Sensible Capacity		Total Capacity		Sensible Capacity	
	m^3/h	cfm	Pa	in.wg	℃	℉	kW	KBtu /h	kW	KBtu /h	kW	KBtu /h	kW	KBtu /h	kW	KBtu /h	kW	KBtu /h
High	2000	1177	0	0	23	73.4	10.26	35.02	7.70	26.26	11.66	39.79	8.16	27.85	12.01	40.98	6.49	22.13
					24	75.2	10.37	35.37	8.29	28.30	11.78	40.20	8.60	29.34	12.13	41.40	7.16	24.43
					27	80.6	10.47	35.73	8.48	28.94	11.90	40.60	9.04	30.86	12.26	41.82	7.97	27.18
					31	87.8	10.58	36.09	8.88	30.31	12.02	41.01	9.50	32.40	12.38	42.24	8.67	29.57
Medium	1800	1059	0	0	23	73.4	10.06	34.32	7.54	25.74	11.43	38.99	8.00	27.30	11.77	40.16	6.36	21.69
					24	75.2	10.16	34.67	8.13	27.73	11.55	39.39	8.43	28.76	11.89	40.57	7.02	23.94
					27	80.6	10.26	35.02	8.31	28.36	11.66	39.79	8.86	30.24	12.01	40.98	7.81	26.64
					31	87.8	10.37	35.37	8.71	29.71	11.78	40.19	9.31	31.75	12.13	41.39	8.49	28.98
Low	1600	942	0	0	23	73.4	9.75	33.27	6.34	21.62	11.08	37.80	7.76	26.46	11.41	38.94	5.71	19.47
					24	75.2	9.85	33.60	6.99	23.86	11.19	38.19	8.17	27.88	11.53	39.33	6.34	21.63
					27	80.6	9.95	33.94	7.16	24.44	11.31	38.57	8.59	29.32	11.64	39.73	6.99	23.84
					31	87.8	10.05	34.28	7.44	25.37	11.42	38.96	9.02	30.78	11.76	40.13	7.64	26.08

Fan Speed	Air Flow Rate		ESP		Entering Air DBT		Outdoor Air Dry Bulb Temperature 118 ℉ (48℃)											
							Indoor Air Wet Bulb Temperature ℉ (℃)											
							62 ℉ (17℃)				67 ℉ (19℃)				72 ℉ (22℃)			
							Total Capacity		Sensible Capacity		Total Capacity		Sensible Capacity		Total Capacity		Sensible Capacity	
	m^3/h	cfm	Pa	in.wg	℃	℉	kW	KBtu /h	kW	KBtu /h	kW	KBtu /h	kW	KBtu /h	kW	KBtu /h	kW	KBtu /h
High	2000	1177	0	0	23	73.4	10.02	34.19	7.52	25.64	11.39	38.85	7.97	27.20	11.73	40.02	6.33	21.61
					24	75.2	10.12	34.54	8.10	27.63	11.50	39.25	8.40	28.65	11.85	40.43	6.99	23.85
					27	80.6	10.23	34.89	8.28	28.26	11.62	39.65	8.83	30.13	11.97	40.84	7.78	26.54
					31	87.8	10.33	35.24	8.68	29.60	11.74	40.04	9.27	31.63	12.09	41.25	8.46	28.87
Medium	1800	1059	0	0	23	73.4	9.82	33.51	7.37	25.13	11.16	38.08	7.81	26.65	11.49	39.22	6.21	21.18
					24	75.2	9.92	33.85	7.94	27.08	11.27	38.47	8.23	28.08	11.61	39.62	6.85	23.38
					27	80.6	10.02	34.19	8.12	27.70	11.39	38.85	8.65	29.53	11.73	40.02	7.62	26.01
					31	87.8	10.12	34.53	8.50	29.01	11.50	39.24	9.09	31.00	11.85	40.42	8.29	28.29
Low	1600	942	0	0	23	73.4	9.52	32.48	6.19	21.11	10.82	36.91	7.57	25.84	11.14	38.02	5.57	19.01
					24	75.2	9.62	32.81	6.83	23.30	10.93	37.29	7.98	27.22	11.26	38.41	6.19	21.12
					27	80.6	9.71	33.15	6.99	23.86	11.04	37.67	8.39	28.63	11.37	38.80	6.82	23.28
					31	87.8	9.81	33.48	7.26	24.77	11.15	38.04	8.81	30.05	11.48	39.18	7.46	25.47

GTH60K3CI

Fan Speed	Air Flow Rate		ESP		Entering Air DBT		Outdoor Air Dry Bulb Temperature 95 ℉ (35℃)											
							Indoor Air Wet Bulb Temperature ℉ (℃)											
							62 ℉ (17℃)				67 ℉ (19℃)				72 ℉ (22℃)			
							Total Capacity		Sensible Capacity		Total Capacity		Sensible Capacity		Total Capacity		Sensible Capacity	
	m^3/h	cfm	Pa	in.wg	℃	℉	kW	KBtu /h	kW	KBtu /h	kW	KBtu /h	kW	KBtu /h	kW	KBtu /h	kW	KBtu /h
High	2000	1177	0	0	23	73.4	13.88	47.37	10.41	35.53	15.78	53.83	11.04	37.68	16.25	55.45	8.78	29.94
					24	75.2	14.03	47.86	11.22	38.29	15.94	54.38	11.64	39.70	16.42	56.02	9.69	33.05
					27	80.6	14.17	48.34	11.48	39.16	16.10	54.93	12.24	41.75	16.58	56.58	10.78	36.78
					31	87.8	14.31	48.82	12.02	41.01	16.26	55.48	12.85	43.83	16.75	57.15	11.72	40.00
Medium	1800	1059	0	0	23	73.4	13.61	46.43	10.21	34.82	15.46	52.76	10.82	36.93	15.93	54.34	8.60	29.34
					24	75.2	13.75	46.90	11.00	37.52	15.62	53.30	11.40	38.91	16.09	54.90	9.49	32.39
					27	80.6	13.88	47.37	11.25	38.37	15.78	53.83	11.99	40.91	16.25	55.45	10.56	36.04
					31	87.8	14.02	47.85	11.78	40.19	15.94	54.37	12.59	42.95	16.41	56.00	11.49	39.20
Low	1600	942	0	0	23	73.4	13.19	45.01	8.57	29.25	14.99	51.14	10.49	35.80	15.44	52.68	7.72	26.34
					24	75.2	13.33	45.46	9.46	32.28	15.14	51.66	11.05	37.72	15.60	53.21	8.58	29.27
					27	80.6	13.46	45.92	9.69	33.07	15.30	52.19	11.62	39.66	15.75	53.75	9.45	32.25
					31	87.8	13.59	46.38	10.06	34.32	15.45	52.71	12.20	41.64	15.91	54.29	10.34	35.29

Fan Speed	Air Flow Rate		ESP		Entering Air DBT		Outdoor Air Dry Bulb Temperature 109 ℉ (43℃)											
							Indoor Air Wet Bulb Temperature ℉ (℃)											
							62 ℉ (17℃)				67 ℉ (19℃)				72 ℉ (22℃)			
							Total Capacity		Sensible Capacity		Total Capacity		Sensible Capacity		Total Capacity		Sensible Capacity	
	m^3/h	cfm	Pa	in.wg	℃	℉	kW	KBtu /h	kW	KBtu /h	kW	KBtu /h	kW	KBtu /h	kW	KBtu /h	kW	KBtu /h
High	2000	1177	0	0	23	73.4	11.80	40.27	8.85	30.20	13.41	45.76	9.39	32.03	13.81	47.13	7.46	25.45
					24	75.2	11.92	40.68	9.54	32.54	13.55	46.23	9.89	33.75	13.95	47.61	8.23	28.09
					27	80.6	12.04	41.09	9.75	33.28	13.69	46.69	10.40	35.49	14.10	48.09	9.16	31.26
					31	87.8	12.16	41.50	10.22	34.86	13.82	47.16	10.92	37.26	14.24	48.57	9.97	34.00
Medium	1800	1059	0	0	23	73.4	11.57	39.46	8.67	29.60	13.14	44.84	9.20	31.39	13.54	46.19	7.31	24.94
					24	75.2	11.68	39.87	9.35	31.89	13.28	45.30	9.69	33.07	13.68	46.66	8.07	27.53
					27	80.6	11.80	40.27	9.56	32.62	13.41	45.76	10.19	34.78	13.81	47.13	8.98	30.64
					31	87.8	11.92	40.67	10.01	34.16	13.55	46.22	10.70	36.51	13.95	47.60	9.77	33.32
Low	1600	942	0	0	23	73.4	11.21	38.25	7.29	24.87	12.74	43.47	8.92	30.43	13.12	44.78	6.56	22.39
					24	75.2	11.33	38.65	8.04	27.44	12.87	43.91	9.40	32.06	13.26	45.23	7.29	24.88
					27	80.6	11.44	39.04	8.24	28.11	13.00	44.36	9.88	33.71	13.39	45.69	8.03	27.41
					31	87.8	11.56	39.43	8.55	29.18	13.13	44.80	10.37	35.39	13.52	46.15	8.79	30.00

Fan Speed	Air Flow Rate		ESP		Entering Air DBT		Outdoor Air Dry Bulb Temperature 118 ℉ (48℃)											
							Indoor Air Wet Bulb Temperature ℉ (℃)											
							62 ℉ (17℃)				67 ℉ (19℃)				72 ℉ (22℃)			
							Total Capacity		Sensible Capacity		Total Capacity		Sensible Capacity		Total Capacity		Sensible Capacity	
	m^3/h	cfm	Pa	in.wg	℃	℉	kW	KBtu /h	kW	KBtu /h	kW	KBtu /h	kW	KBtu /h	kW	KBtu /h	kW	KBtu /h
High	2000	1177	0	0	23	73.4	11.52	39.32	8.64	29.49	13.10	44.68	9.17	31.28	13.49	46.02	7.28	24.85
					24	75.2	11.64	39.72	9.31	31.78	13.23	45.14	9.66	32.95	13.63	46.49	8.04	27.43
					27	80.6	11.76	40.12	9.53	32.50	13.36	45.59	10.16	34.65	13.76	46.96	8.95	30.53
					31	87.8	11.88	40.52	9.98	34.04	13.50	46.05	10.66	36.38	13.90	47.43	9.73	33.20
Medium	1800	1059	0	0	23	73.4	11.29	38.53	8.47	28.90	12.83	43.79	8.98	30.65	13.22	45.10	7.14	24.36
					24	75.2	11.41	38.93	9.13	31.14	12.96	44.24	9.46	32.29	13.35	45.56	7.88	26.88
					27	80.6	11.52	39.32	9.33	31.85	13.10	44.68	9.95	33.96	13.49	46.02	8.77	29.92
					31	87.8	11.64	39.71	9.78	33.36	13.23	45.13	10.45	35.65	13.62	46.48	9.54	32.54
Low	1600	942	0	0	23	73.4	10.95	37.35	7.12	24.28	12.44	42.45	8.71	29.71	12.81	43.72	6.41	21.86
					24	75.2	11.06	37.74	7.85	26.79	12.57	42.88	9.17	31.30	12.94	44.17	7.12	24.29
					27	80.6	11.17	38.12	8.04	27.44	12.69	43.31	9.65	32.92	13.08	44.61	7.85	26.77
					31	87.8	11.28	38.50	8.35	28.49	12.82	43.75	10.13	34.56	13.21	45.06	8.58	29.29

4.4 Electrical Data

Model		Compressor			Fan Motor		Max. Fuse Breaker Size (Indoor/Outdoor)	Min. Disconnect Size (Indoor/Outdoor)
		Power Supply	Qty.	RLA	Condenser Fan Motors	Supply Blower Motor		
		V,Ph,Hz	—	Each	FLA Each	FLA Each	Amperes	Amperes
GUHD09NK3CO	GFH09K3CI	220-240 1, 50	1	4.8A	0.35A	0.31A	6/16	1.0/2.5
GUHD09NK3C1O	GTH09K3CI					0.1A		1.0/2.5
GUHD12NK3CO	GFH12K3CI		1	4.8A	0.35A	0.41A	6/16	1.0/2.5
GUHD12NK3C1O	GTH12K3CI					0.10A		1.0/2.5
	GKH12K3CI					0.2A		1.0/2.5
GUHD18NK3CO	GFH18K3CI		1	8.38A	0.58A	0.71A	6/20	1.0/4.0
GUHD18NK3C1O	GTH18K3CI					0.21A		1.0/4.0
	GKH18K3CI					0.35A		1.0/4.0
GUHD24NK3CO	GFH24K3CI		1	9.7A	0.85A	1.52A	6/20	1.0/4.0
GUHD24NK3C1O	GTH24K3CI					0.51A		1.0/4.0
	GKH24K3CI					0.40A		1.0/4.0
GUHD30NK3CO	GFH30K3CI		1	9.7A	0.85A	1.52A	6/20	1.0/4.0
GUHD30NK3C1O	GTH30K3CI					0.76A		1.0/4.0
	GKH30K3CI					0.61A		1.0/4.0
GUHD36NK3CO	GFH36K3CI		1	13.5A	1.1A	5.05A	6/25	1.0/4.0
GUHD36NK3C1O	GTH36K3CI					1.52A		1.0/4.0
	GKH36K3CI					0.61A		1.0/4.0
GUHD42NK3CO	GFH42K3CI		1	13.5A	1.1A	5.05A	6/25	1.0/4.0
GUHD42NK3C1O	GTH42K3CI					1.52A		1.0/4.0
	GKH42K3CI					0.61A		1.0/4.0
GUHD48NK3CO	GFH48K3CI		1	-	0.58A	5.05A	6/32	1.0/6.0
GUHD48NK3C1O	GTH48K3CI					2.53A		1.0/6.0
GUHD36NM3CO	GFH36K3CI	380-415~ 3, 50	1	9.3A	1.1A	5.05A	6/16	1.0/2.5
GUHD36NM3C1O	GTH36K3CI					1.52A		1.0/2.5
	GKH36K3CI					0.61A		1.0/2.5
GUHD42NM3CO	GFH42K3CI		1	9.3A	1.1A	5.05A	6/16	1.0/2.5
GUHD42NM3C1O	GTH42K3CI					1.52A		1.0/2.5
	GKH42K3CI					0.61A		1.0/2.5
GUHD48NM3CO	GFH48K3CI		1	-	0.58A	5.05A	6/16	1.0/2.5
GUHD48NM3C1O	GTH48K3CI					2.53A		1.0/2.5
GUHD60NM3CO	GFH60K3CI		1	-	0.8A	3.33A	6/16	1.0/2.5
GUHD60NM3C1O	GTH60K3CI					2.53A		1.0/2.5

Notes:
RLA: Rated load amperes
LRA: Locked rotor amperes
FLA: Full load current
The parameters of the power cord listed above are only applicable to the BV single-core power cord which is laid within the plastic bushing and used at 40℃ , and those of the air switch are applicable to the one which also is used at 40℃ . If the actual installation conditions changes, please refer to the instructions of the power cord and the air switch.
The power cord must be separated with the communication line.

5 FAN CHARACTERISTICS

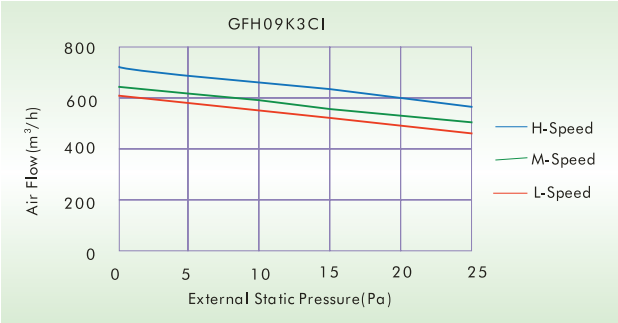

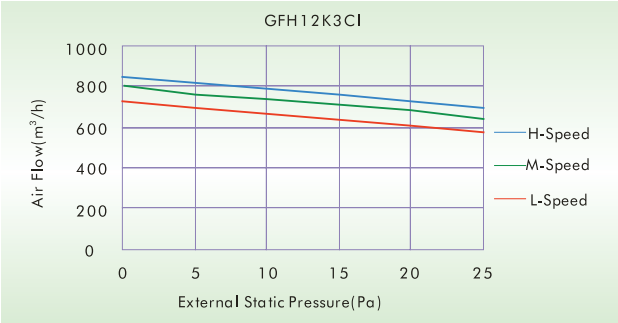

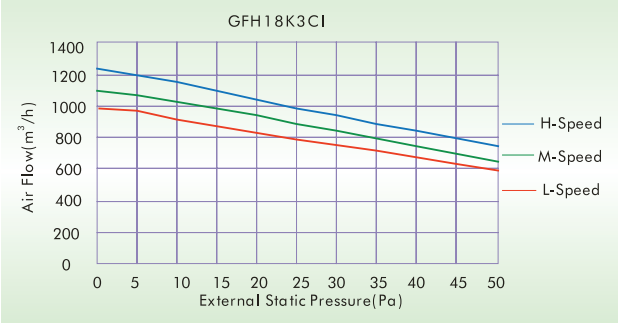

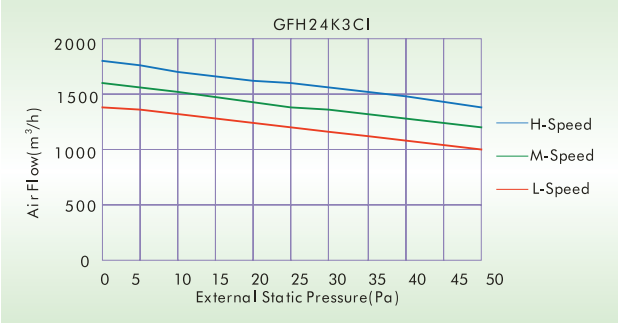

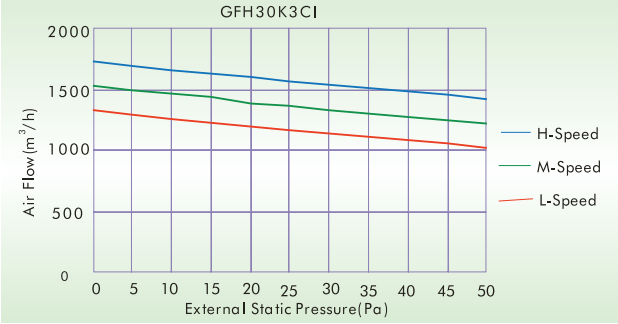

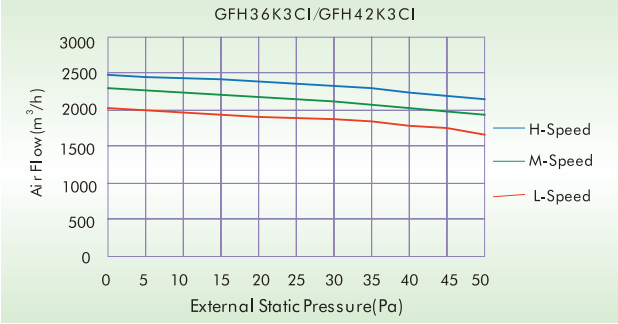

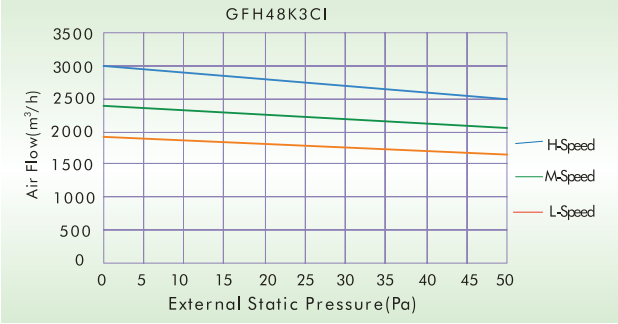

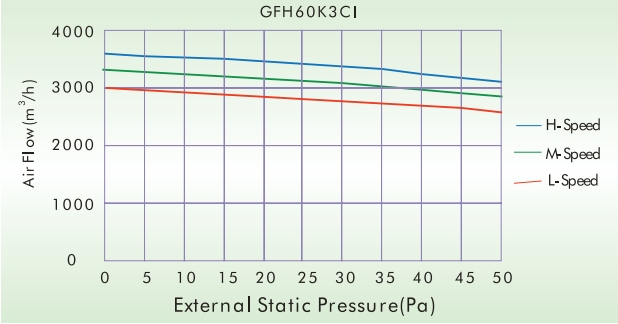

6 DIMENSION

6.1 Outdoor Units

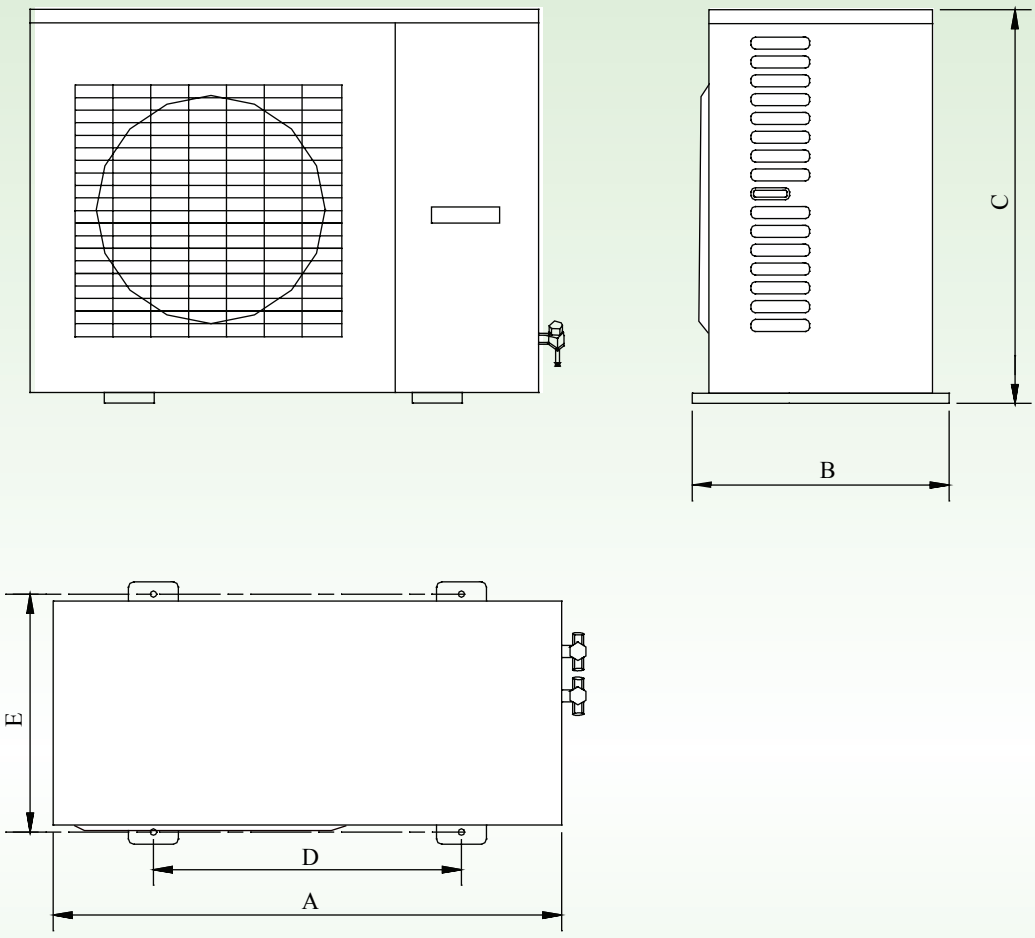

Space reguired for service

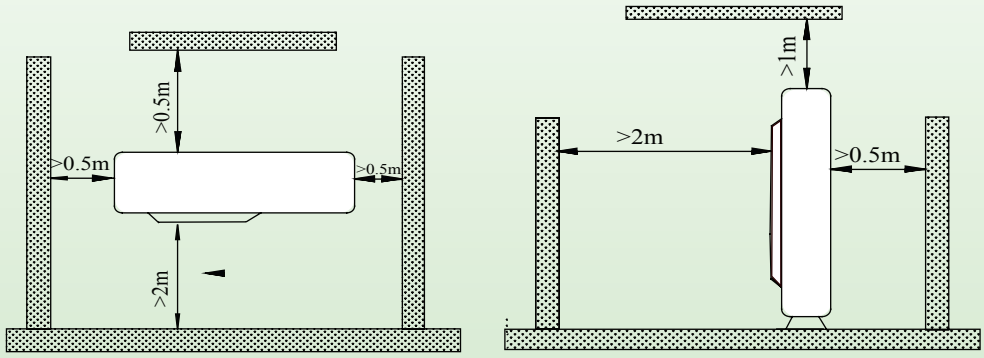

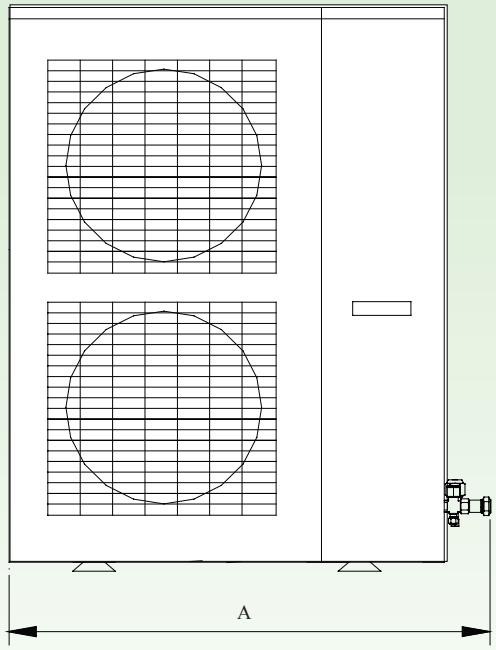

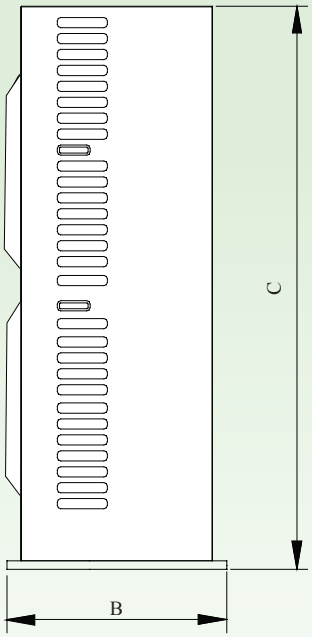

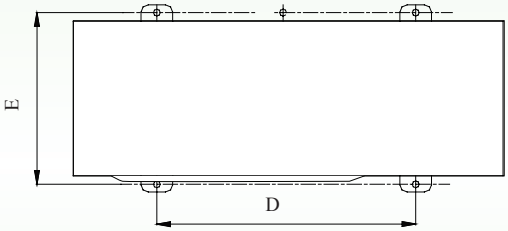

Space reguired for service

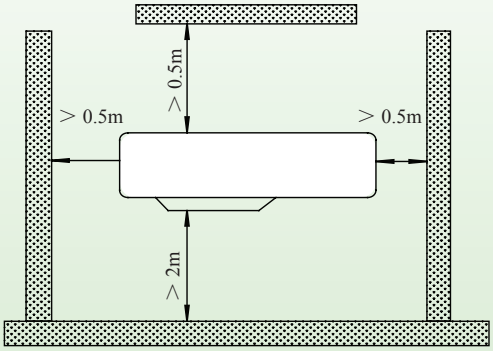

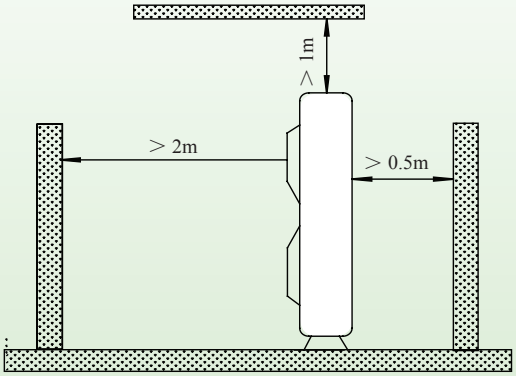

Unit:mm

Item / Model	A	B	C	D	E
GUHD09NK3CO/GUHD12NK3CO	776	320	540	510	286
GUHD09NK3C1O/GUHD12NK3C1O	848	320	540	510	286
GUHD18NK3CO/GUHD18NK3C1O	955	396	700	560	360
GUHD24NK3CO/GUHD24NK3C1O GUHD30NK3CO/GUHD30NK3C1O	980	427	790	610	395
GUHD36NK3CO/GUHD36NK3C1O GUHD36NM3CO/GUHD36NM3C1O GUHD42NK3CO/GUHD42NK3C1O GUHD42NM3CO/GUHD42NM3C1O	1107	440	1100	631	400
GUHD48NK3CO/GUHD48NK3C1O GUHD48NM3CO/GUHD48NM3C1O GUHD60NM3CO/GUHD60NM3C1O	1085	427	1365	620	395

6.2 Indoor Units

Duct type (09-18kBtu/h)

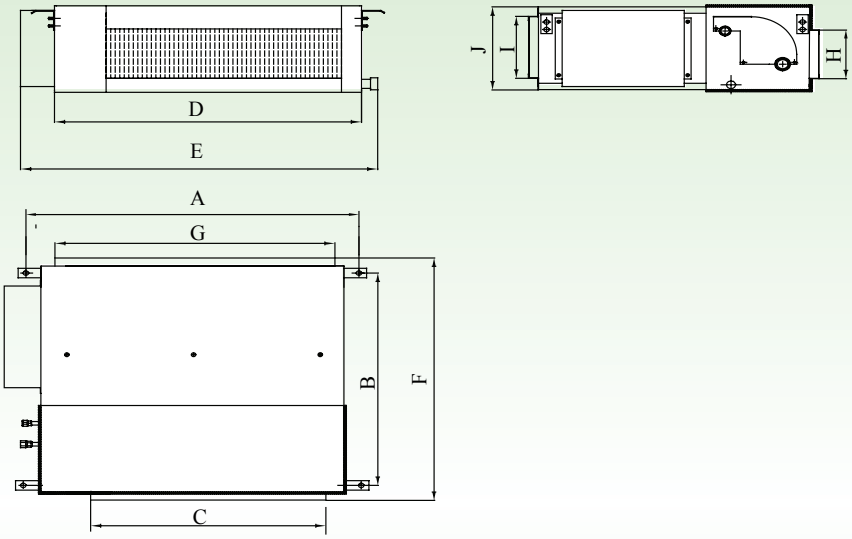

Space reguired for service

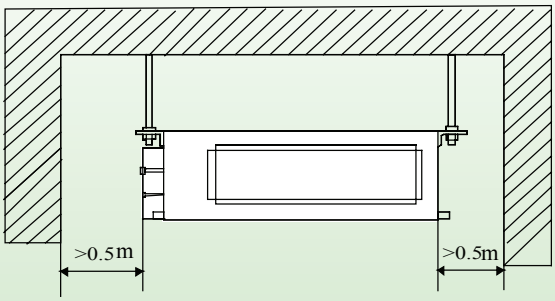

Duct type (24-48kBtu/h)

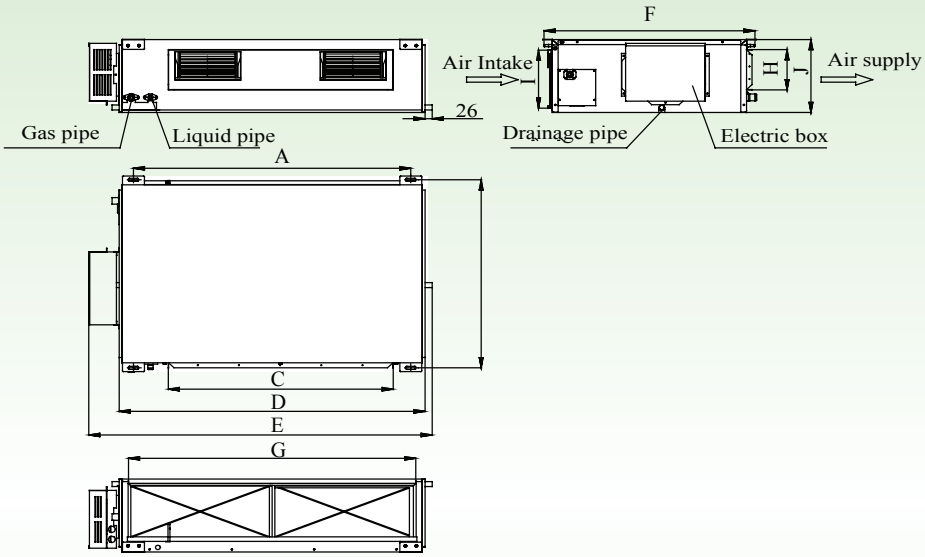

Space reguired for service

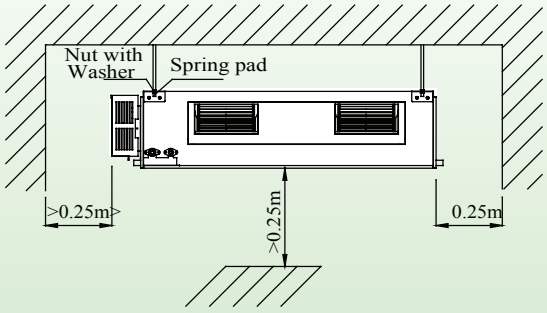

Duct type (60kBtu/h)

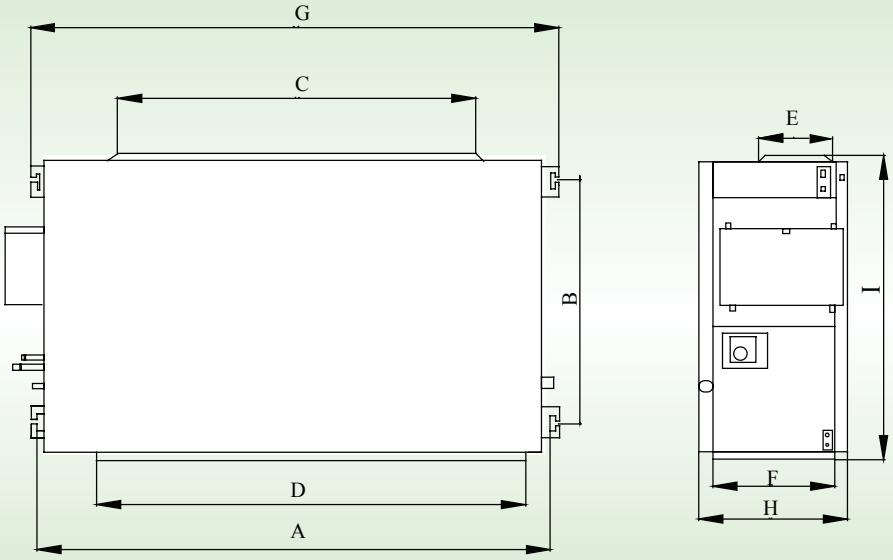

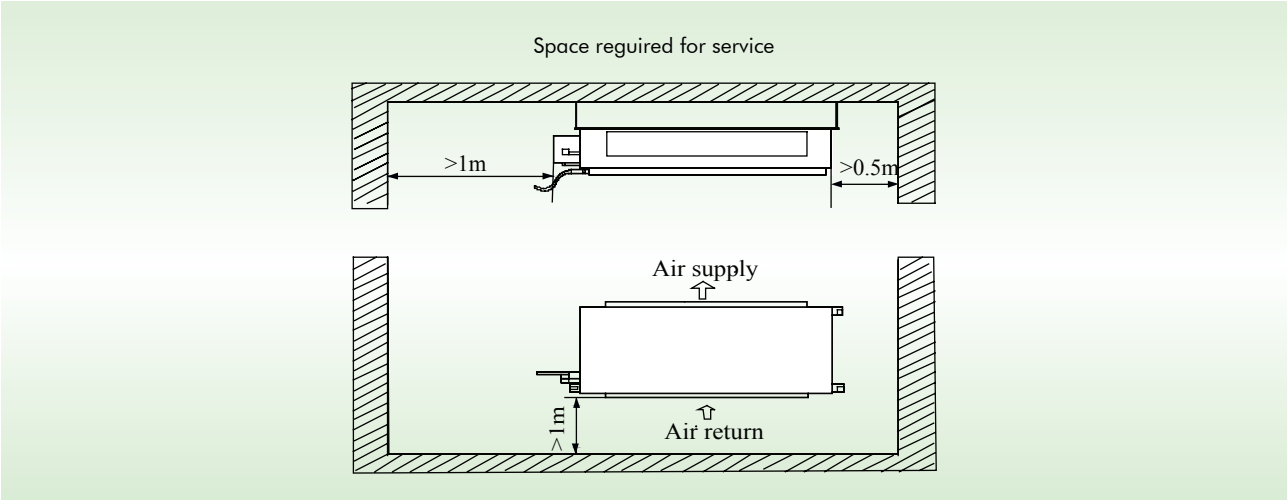

Unit:mm

Item / Model	A	B	C	D	E	F	G	H	I	J
GFH09K3CI	840	561	635	790	880	665	738	125	203	250
GFH12K3CI	932	430	738	892	980	721	738	125	203	266
GFH18K3CI	932	430	738	892	980	721	738	125	203	266
GFH24K3CI	1101	515	820	1159	1270	530	1002	160	235	268
GFH30K3CI										
GFH36K3CI	1011	748	820	1115	1226	775	979	160	231	290
GFH42K3CI										
GFH48K3CI	1015	788	820	1115	1226	815	979	160	261	330
GFH60K3CI	1353	632	992	1150	192	343	1463	385	799	--

Note: there should be an angle of inclination of 5° along the drain pipe during the installation of the duct type unit so as to drain easily.

Cassette type(12kBtu/h)

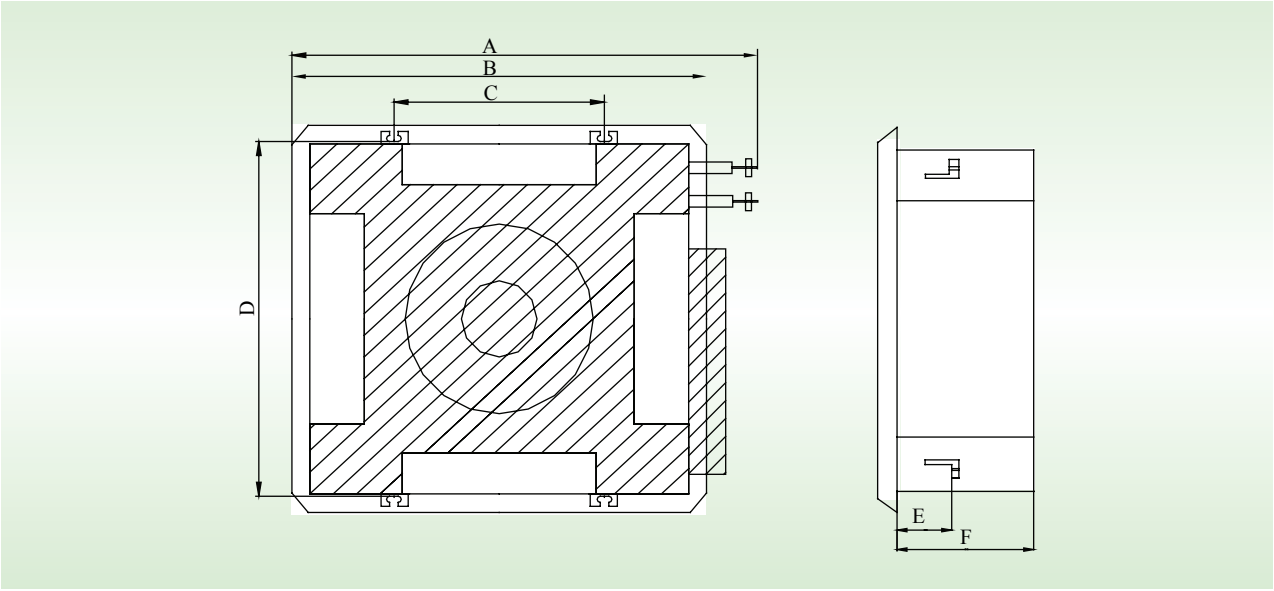

Space reguired for service

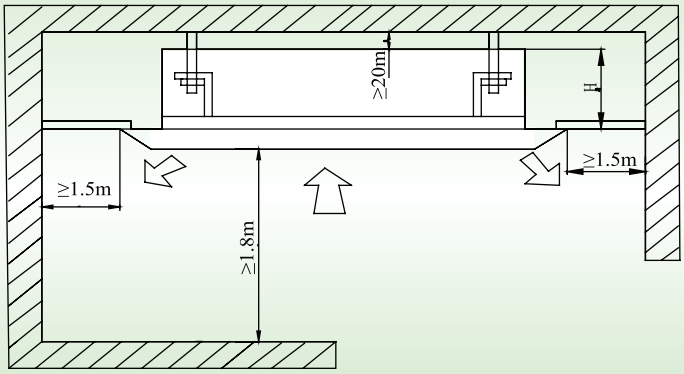

Unit:mm

Item / Model	A	B	C	D	E	F
GKH09K3CI	710	650	400	606	160	250

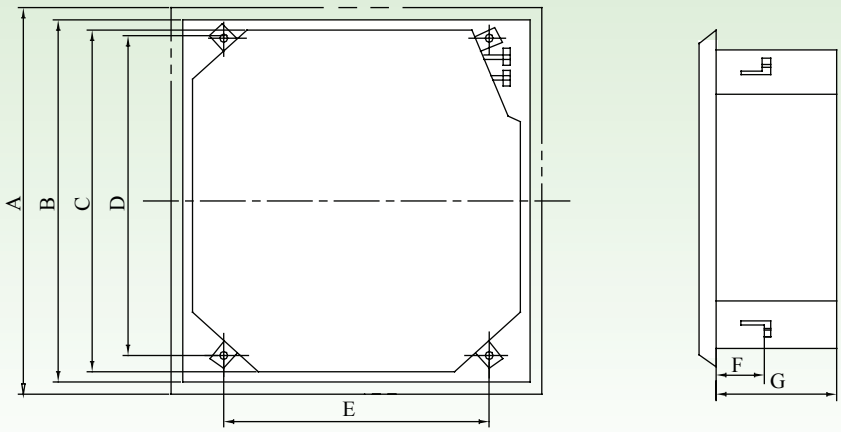

Space reguired for service

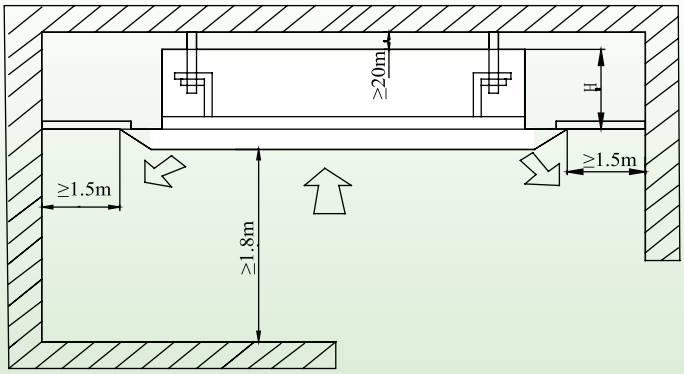

Unit:mm

Item / Model	A	B	C	D	E	F	G
GKH18K3CI GKH24K3CI	950	890	840	780	680	160	240
GKH30K3CI GKH36K3CI GKH42K3CI	950	890	738	892	980	721	320

Model	H(mm)
GKH12K3CI	250
GKH18K3CI/GKH24K3CI	260
GKH30K3CI/GKH36K3CI/GKH42K3CI	340

Floor Ceiling type

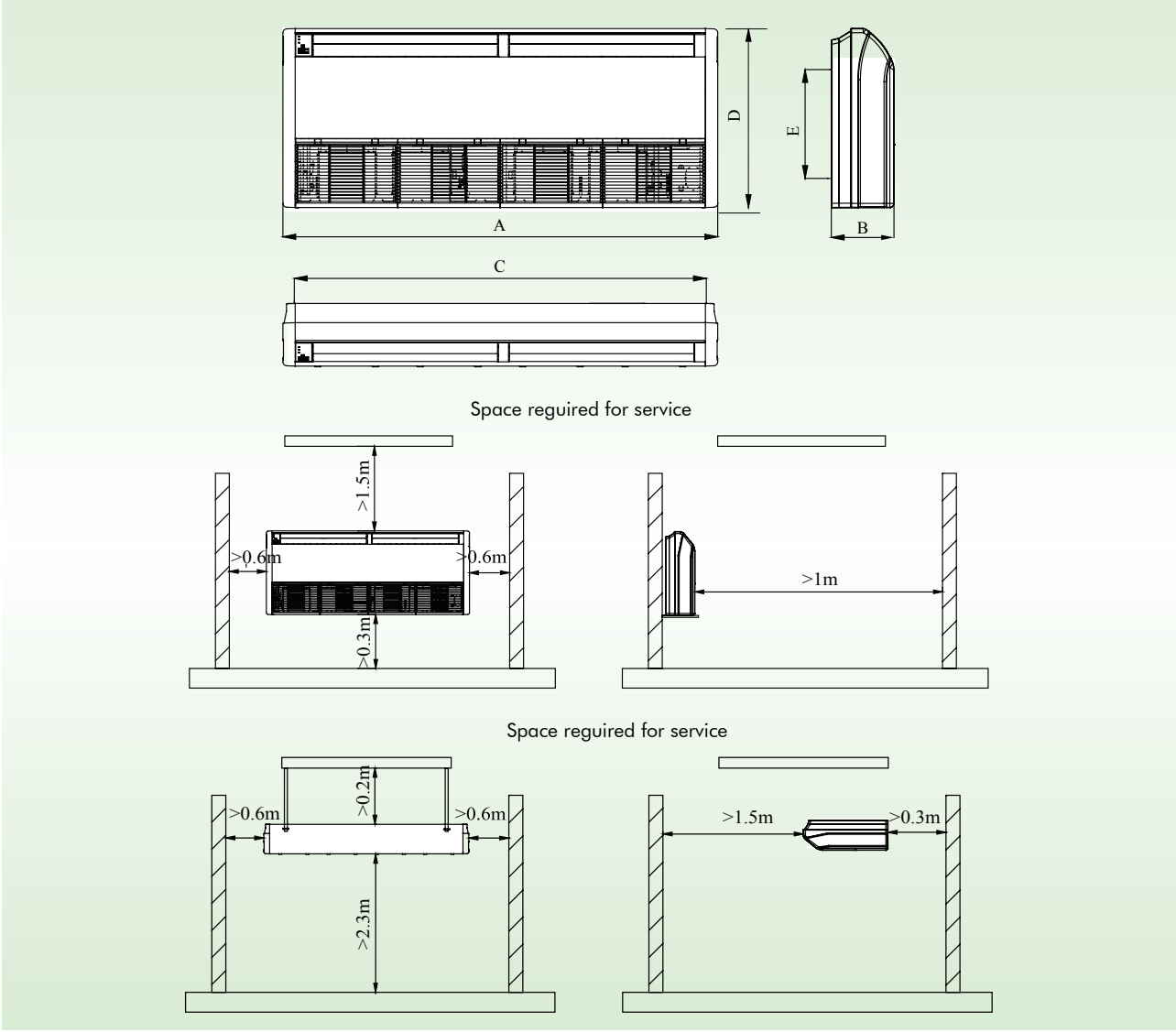

Unit:mm

Item / Model	A	B	C	D	E
GTH09K3CI GTH12K3CI GTH18K3CI GTH24K3CI	1220	225	1158	700	280
GTH30K3CI GTH36K3CI GTH42K3CI	1420	245	1354	700	280
GTH48K3CI GTH60K3CI	1700	245	1634	700	280

6.3 Dimension – Controller

Wired Controller (Standard)

Unit:mm

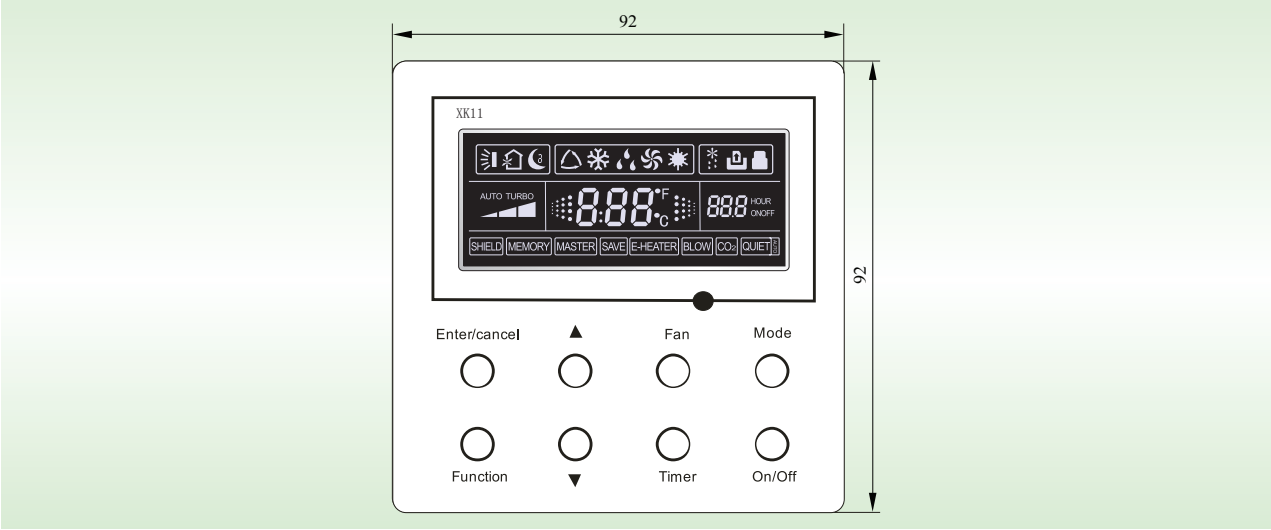

Centralized Controller(Optional)

Unit:mm

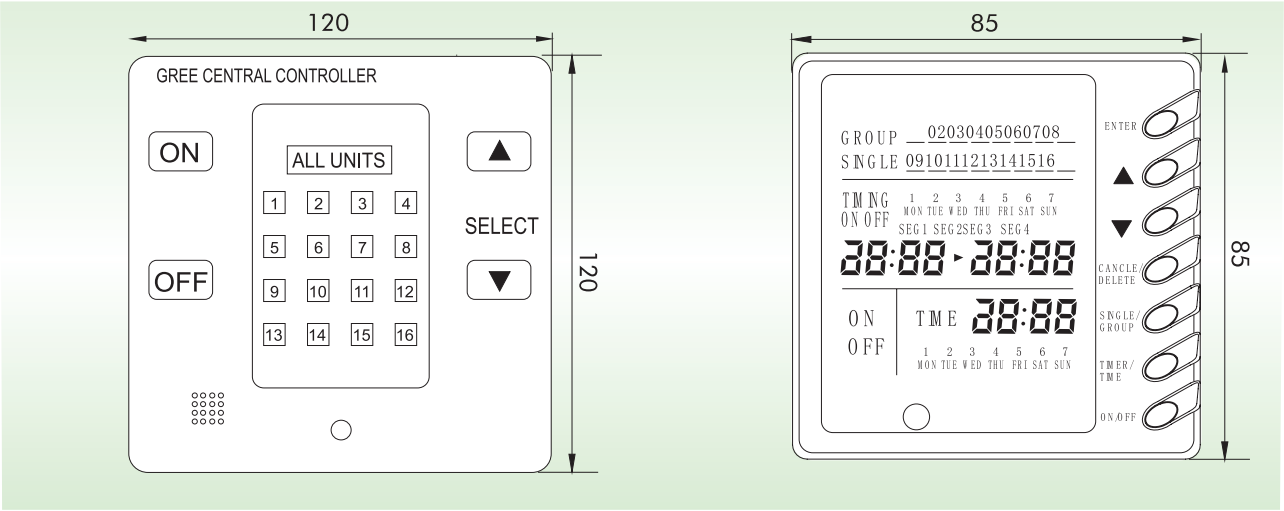

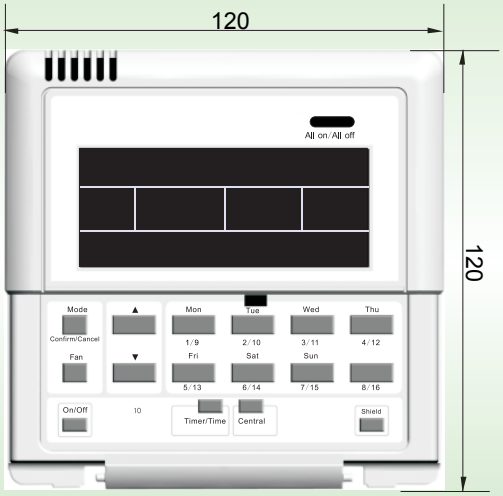

7 WIRING DIAGRAM

7.1 Field Wiring Diagrams

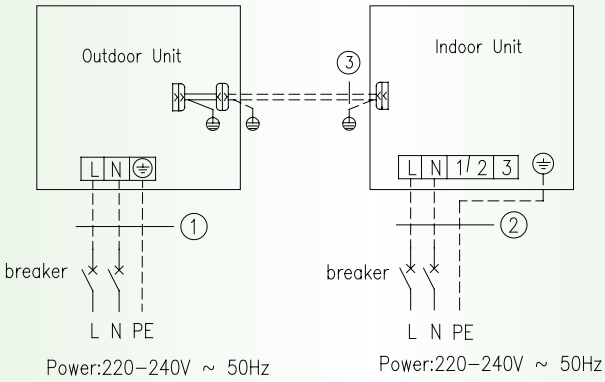

GUHD09NK3CO/GUHD09NK3C1O	+	GFH09K3CI
GUHD12NK3CO/GUHD12NK3C1O	+	GFH12K3CI

① Power cord 3×2.5 mm^2(H07RN-F) ② Power cord 3×1.0 mm^2(H05VV-F)
③ Communication Cords

GUHD36NK3CO/GUHD36NK3C1O	+	GFH36K3CI
GUHD42NK3CO/GUHD42NK3C1O	+	GFH42K3CI

① Power cord 3×4.0 mm^2(H07RN-F) ② Power cord 3×1.0 mm^2(H05VV-F)
③ Communication Cords

GUHD48NK3CO/GUHD48NK3CO + GFH48K3CI

① Power cord 3×6.0 mm²(H07RN-F) ② Power cord 3×1.0 mm²(H05VV-F)
③ Communication Cords

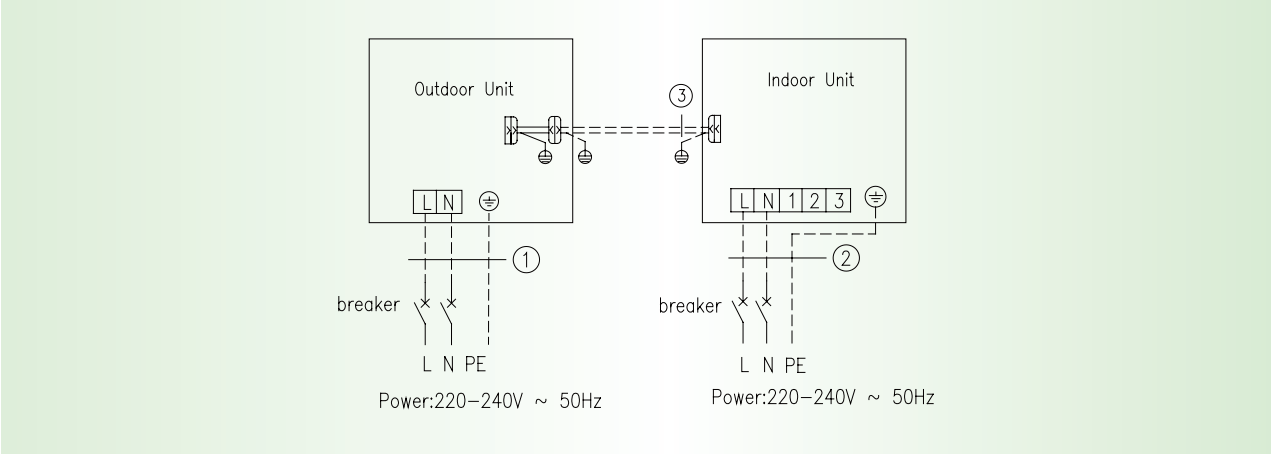

GUHD18NK3CO/GUHD18NK3C1O + GFH18K3CI
GUHD24NK3CO/GUHD24NK3C1O + GFH24K3CI
GUHD30NK3CO/GUHD30NK3C1O + GFH30K3CI

① Power cord 3×4.0 mm²(H07RN-F) ② Power cord 3×1.0 mm²(H05VV-F)
③ Communication Cords

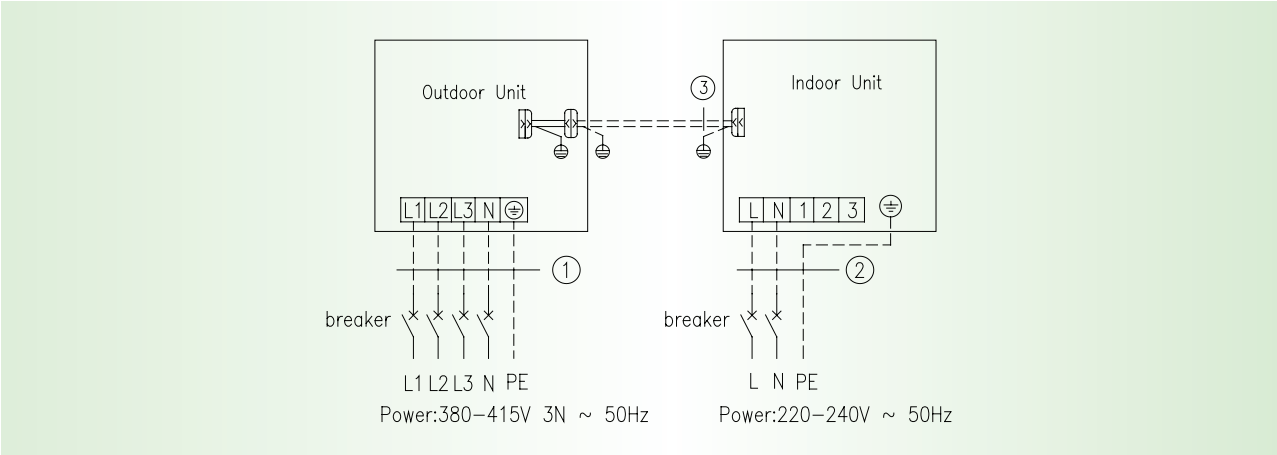

GUHD36NM3CO/GUHD36NM3C1O + GFH36K3CI
GUHD42NM3CO/GUHD42NM3C1O + GFH42K3CI
GUHD48NM3CO/GUHD48NM3C1O + GFH48K3CI
GUHD60NM3CO/GUHD60NM3C1O + GFH60K3CI

① Power cord 5×2.5 mm²(H07RN-F) ② Power cord 3×1.0 mm² (H05VV-F)
③ Communication Cords

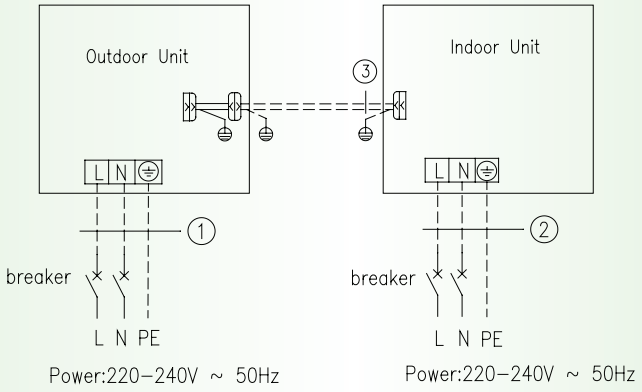

GUHD09NK3CO/GUHD09NK3C1O + GTH09K3CI
GUHD12NK3CO/GUHD12NK3C1O + GTH12K3CI

① Power cord 3×2.5 mm²(H07RN-F) ② Power cord 3×1.0 mm² (H05VV-F)
③ Communication Cords

GUHD36NK3CO/GUHD36NK3C1O + GTH36K3CI
GUHD42NK3CO/GUHD42NK3C1O + GTH42K3CI

① Power cord 3×4.0 mm²(H07RN-F) ② Power cord 3×1.0 mm² (H05VV-F)
③ Communication Cords

GUHD48NK3CO/GUHD48NK3C1O + GTH48K3CI

① Power cord 3×6.0 mm²(H07RN-F) ② Power cord 3×1.0 mm² (H05VV-F)
③ Communication Cords

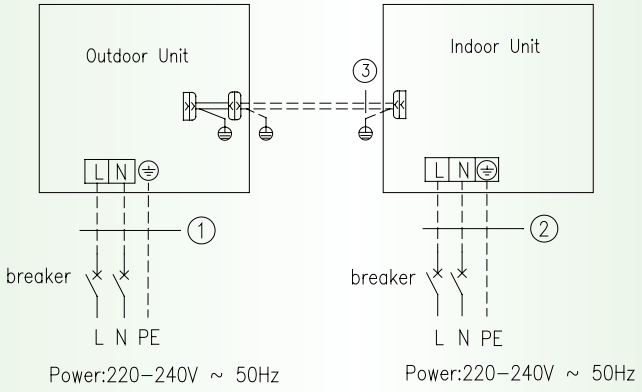

GUHD18NK3CO/GUHD18NK3C1O + GTH18K3CI
GUHD24NK3CO/GUHD24NK3C1O + GTH24K3CI
GUHD30NK3CO/GUHD30NK3C1O + GTH30K3CI

① Power cord 3×4.0 mm²(H07RN-F) ② Power cord 3×1.0 mm² (H05VV-F)
③ Communication Cords

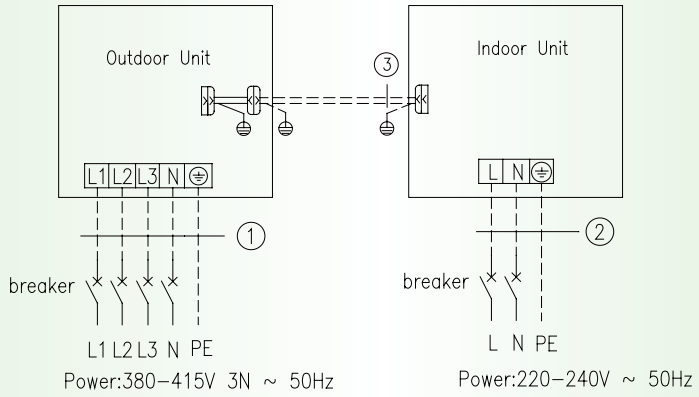

GUHD36NM3CO/GUHD36NM3C1O + GTH36K3CI
GUHD42NM3CO/GUHD42NM3C1O + GTH42K3CI
GUHD48NM3CO/GUHD48NM3C1O + GTH48K3CI
GUHD60NM3CO/GUHD60NM3C1O + GTH60K3CI

① Power cord 5×2.5 mm²(H07RN-F) ② Power cord 3×1.0 mm² (H05VV-F)
③ Communication Cords

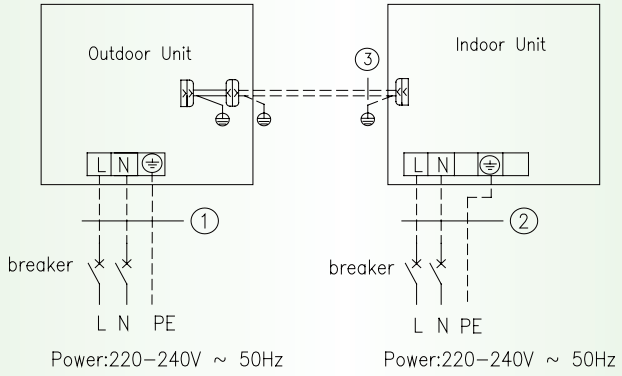

GUHD12NK3CO/GUHD12NK3C1O + GKH12K3CI

① Power cord 3×2.5 mm² (H07RN-F) ② Power cord 3×1.0 mm² (H05VV-F)
③ Communication Cords

GUHD36NK3CO/GUHD36NK3C1O + GKH36K3CI
GUHD42NK3CO/GUHD42NK3C1O + GKH42K3CI

① Power cord 3x4.0mm² (H07RN-F) ② Power cord 3x1.0mm² (H05V V-F)
③ Communication Cords

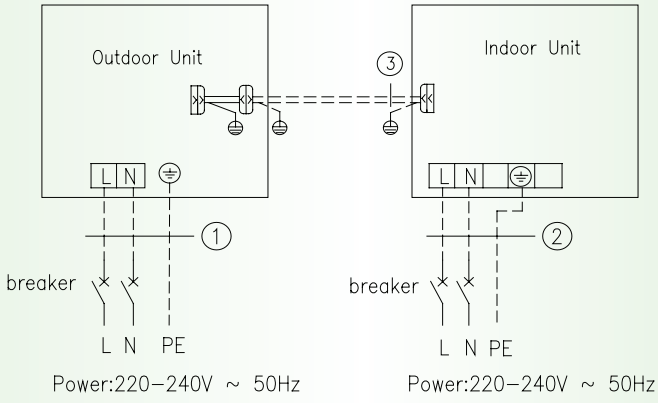

GUHD18NK3CO /GUHD18NK3C1O + GKH18K3CI
GUHD24NK3CO/GUHD24NK3C1O + GKH24K3CI
GUHD30NK3CO/GUHD30NK3C1O + GKH30K3CI

① Power cord 3x4.0mm² (H07RN-F) ② Power cord 3x1.0mm² (H05V V-F)
③ Communication Cords

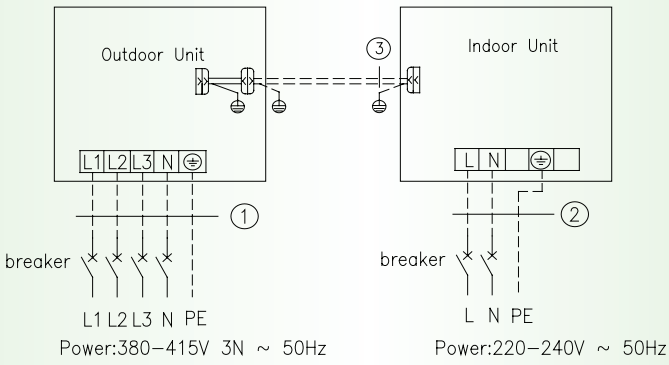

GUHD36NM3CO/GUHD36NM3C1O + GKH36K3CI
GUHD42NM3CO/GUHD42NM3C1O + GKH42K3CI

① Power cord 5x 2.5mm² (H07RN-F) ② Power cord 3x1.0mm² (H05V V-F)
③ Communication Cords

7.2 Specification of Power Supply Wire and Air Switch

Model	Power Supply	Capability of Air Switch(A)	Minimum Sectional Area Of Earth Wire (mm^2)	Minimum Sectional Area Of power Wire (mm^2)
GUHD09NK3CO/GUHD09NK3C1O	220-240V～50HZ	16	2.5	2.5
GUHD12NK3CO/GUHD12NK3C1O		16	2.5	2.5
GUHD18NK3CO/GUHD18NK3C1O		20	4.0	4.0
GUHD24NK3CO/GUHD24NK3C1O		20	4.0	4.0
GUHD30NK3CO/GUHD30NK3C1O		20	4.0	4.0
GUHD36NK3CO/GUHD36NK3C1O		25	4.0	4.0
GUHD42NK3CO/GUHD42NK3C1O		25	4.0	4.0
GUHD48NK3CO/GUHD48NK3C1O		32	6.0	6.0
GUHD36NM3CO/GUHD36NM3C1O	380-415V 3N～50Hz	16	2.5	2.5
GUHD42NM3CO/GUHD42NM3C1O		16	2.5	2.5
GUHD48NM3CO/GUHD48NM3C1O		16	2.5	2.5
GUHD60NM3CO/GUHD60NM3C1O		16	2.5	2.5

Model	Power Supply	Capability of Air Switch(A)	Minimum Sectional Area Of Earth Wire (mm^2)	Minimum Sectional Area Of power Wire (mm^2)
GFH09K3CI	220-240V～50HZ	6	1.0	1.0
GFH12K3CI		6	1.0	1.0
GFH18K3CI		6	1.0	1.0
GFH24K3CI		6	1.0	1.0
GFH30K3CI		6	1.0	1.0
GFH36K3CI		6	1.0	1.0
GFH42K3CI		6	1.0	1.0
GFH48K3CI		6	1.0	1.0
GFH60K3CI		6	1.0	1.0

Model	Power Supply	Capability of Air Switch(A)	Minimum Sectional Area Of Earth Wire (mm^2)	Minimum Sectional Area Of power Wire (mm^2)
GTH09K3CI	220-240V～50HZ	6	1.0	1.0
GTH12K3CI		6	1.0	1.0
GTH18K3CI		6	1.0	1.0
GTH24K3CI		6	1.0	1.0
GTH30K3CI		6	1.0	1.0
GTH36K3CI		6	1.0	1.0
GTH42K3CI		6	1.0	1.0
GTH48K3CI		6	1.0	1.0
GTH60K3CI		6	1.0	1.0

Model	Power Supply	Capability of Air Switch(A)	Minimum Sectional Area Of Earth Wire (mm^2)	Minimum Sectional Area Of power Wire (mm^2)
GTH12K3CI	220-240V ～ 50HZ	6	1.0	1.0
GTH18K3CI		6	1.0	1.0
GTH24K3CI		6	1.0	1.0
GTH30K3CI		6	1.0	1.0
GTH36K3CI		6	1.0	1.0
GTH42K3CI		6	1.0	1.0

Note:
The parameters of the power cord listed above are only applicable to the BV single-core power cord which is laid within the plastic bushing and used at 40℃ , and those of the air switch are applicable to the one which also is used at 40℃ . If the actual installation conditions changes, please refer to the instructions of the power cord and the air switch.
All the ACCESSORIES are in the indoor unit.

8 ACCESSORIES

Class / Model Name	Wireless controller	wired controller	Central controller with weekly timer	Long-distance monitoring system	Communication cable	Water pump	Flexible pipe
GFH09K3CI GFH12K3CI GFH18K3CI GFH24K3CI GFH36K3CI GFH42K3CI GFH48K3CI	●	●	○	○	●	○	●
GFH30K3CI GFH60K3CI	●	●	○	○	●	—	●
GTH09K3CI GTH12K3CI GTH18K3CI GTH24K3CI GTH30K3CI GTH36K3CI GTH42K3CI GTH48K3CI GTH60K3CI	●	●	○	○	●	—	●
GKH12K3CI GKH18K3CI GKH24K3CI GKH30K3CI GKH36K3CI GKH42K3CI GKH48K3CI	●	●	○	○	●	●	●

Note: "●" is standard ; "○" is optional; "—"is unavailable .

Designed by Cooper&Hunter International Corporation, Oregon, USA

www.cooperandhunter.com